Editor's Note:

No electronic version was received for this manuscript. The document was entirely scanned, and is presented as a series of page-images. Consequently, it is not text-searchable and will print slowly.

THERMAL DIFFUSIVITY BY MODIFIED AC CALORIMETRY USING A MODULATED LASER BEAM ENERGY SOURCE

BY

R. Kato, A. Maesono, R.P. Tye & I Hatta*
Sinku Riko, Inc. Yokohama & *Nagoya University, Japan

ABSTRACT

Modified ac calorimetry, a variation of the Angstrom method, has been shown to be a precise tool for measuring the in-plane thermal diffusivity of thin films (thickness less than 300 microns) of a wide variety of materials and layered composites. The property is determined from an analysis of the decay curve of the ac temperature waves generated by irradiation of a specimen using uniform chopped light (at frequencies 1-20Hz) from a halogen lamp source.

To address certain limiting factors and especially the elimination of heat losses an improved form of measurement instrument has been developed and will be described. It is based on the use of a modulated laser beam heating source and a special optical system to ensure that one dimensional ac temperature wave propagation is obtained. Measurements can now be made using frequencies in the range of 0.125 to 2Hz, i.e., ten times lower than in the traditional method.

The performance of the improved measurement instrument will be illustrated by results on various materials of known thermal properties such as nickel and stainless steel, proposed reference materials such as a glassy carbon and alumina, plus a comparison of results obtained on CVD diamond films used in an international round robin series with those obtained by the traditional technique.

INTRODUCTION

Modified ac calorimetry has been used for over ten years to measure the in-plane thermal diffusivity and derived thermal conductivity of thin films. The basic method and its verification have been described in detail [1-3]. Essentially the partially masked surface of a small rectangular piece is irradiated by uniform chopped light generated by a halogen lamp and the ac temperature on the opposite surface is monitored as the specimen is moved in small increments. The thermal diffusivity is obtained from the linear decay curve of the ac temperature waves.

It has been used to measure the thermal properties of films a variety of materials including CVD diamond, metals, alloys, ceramics and polymers covering a broad range of thermal diffusivity. For very thin films or for materials having very low values of thermal diffusivity, the high precision of measurements requires vacuum conditions in order to minimise the heat loss effect of the gaseous layer at the surface.

A limiting factor in the traditional method is the selection of the optimum heating frequency. It needs to be low enough to ensure that the specimen thickness plus any addenda is smaller that the effective diffusion length while it also has to be high enough to avoid heat loss effects. Chopped halogen light from a lamp is used to obtain uniform ac light irradiation to yield ac temperature amplitudes greater than 0.01°C. Even in some cases the amplitude is found to be insufficient for reliable measurement and the light source intensity needs to be increased. In order to accomplish this, use of a modulated laser beam scanning the surface in a direction perpendicular to the surface was considered as a replacement for the halogen lamp[4]. For this case of non-uniform light irradiation of finite width instead of uniform half-finite ac irradiation a solution of the thermal conduction was obtained and validated experimentally[5,6]. This verified that the intensity profile need not be uniform in this direction of the ac temperature wave propagation (x) but did need to be uniform in the perpendicular direction (y) to ensure that the ac temperature wave propagation was unidirectional. The latter situation can be attained by forming a narrow strip of ac irradiation by utilising a sweeping laser beam at high frequency in conjunction with an appropriate optical system.

The issues of heat loss to the surrounding surface air layer effects necessitating a vacuum for some samples and edge reflection in high thermal diffusivity materials have also been addressed by Gu and colleagues [7,8]. The analysis indicated that elimination of heat losses can be undertaken by simultaneous measurements of the "effective" thermal diffusivities obtained from both the experimental amplitude decay and the phase shift. The true thermal diffusivity is determined from the square root of the two "effective" thermal diffusivities. However while the initial experimental verification[7] using thermoelectric heat source indicated that this was possible, some later experiments using direct laser heating showed that heat losses could be quite significant unless corrected due to non-uniform heat flux in the perpendicular direction (y) due to the use of a non-scanning laser heating.

Based upon the above considerations, a measurement system ws developed to take advantage of the use of scanning laser heating to provide a highly uniform and high intensity energy source combined with the application of an advanced method of analysis using both the amplitude and phase shift to eliminate the effects of heat loss. The major advantages of the improved technique are the use of much lower measuring frequencies, providing the thermal diffusion length is short enough to avoid edge effects, and much improved temperature uniformity of the test specimen thereby ensuring one dimensional temperature wave propagation. The following sections describe the experimental system and the verification of its performance using a range of materials having known thermal properties covering a broad range of values.

EXPERIMENTAL SYSTEM & OPERATION

The system is illustrated schematically in Figure 1. The ac thermal energy source is a laser diode having a total output power of 30W with an output instability within 0.24% per °C and operating at 680nm. The modulated beam is focused to a spot diameter of less than 100 micron. A polygonal mirror having sixteen flat polished faces to reflect the laser beam swept in the angular range of 45 degrees

is used to concentrate the beam into a narrow strip approximately 0.5mm wide and 5 to 6 mm wide as shown in Figure 2. The mirror is rotated at 1200 rpm such that the sweeping frequency is 320Hz which is sufficiently fast enough in comparison with the measuring frequencies normally used (0.01 to 2Hz).

The test piece is usually rectangular, some 20 to 30 mm long by 4 to 5 mm wide and a thickness which can vary from approximately 1 to 1000 microns. One surface is coated uniformly with a thin film of graphite sprayed on to provide a high emittance surface to ensure efficient and uniform absorption of the incident energy. The test sample is then fixed into a special holder with both ends supported and with the black surface facing the laser as shown in Figure 3. A thermocouple approximately 0.1mm in diameter is attached on the opposite surface by means of a spot of silver paste such that a common hot junction is formed so that both the ac temperature excursion and the ac temperature can be monitored continuously.

The ac signal is amplified using an input transformer and a low noise chopper amplifier. In traditional ac calorimetry using a halogen lamp source, the input transformer produced high signal-to-noise ratio signals at normal frequencies of operation (2 to 20Hz) but could not be used at such low frequencies as those used in the present system. However, the laser diode produces much higher power levels (X10 to 50 or so) thus allowing use of the input transformer. The chopper amplifier has a band width of 10Hz but with a noise level of only 10nV at 0.1 to 10Hz. The system is operated automatically using a microcomputer and personal computer with an RS 232 C interface.

In a measurement the thermal diffusion length is selected in the range 2 to 4mm and a typical frequency set by trial measurements to obtain this diffusion length. Measurements are then made at three or more frequencies but certainly at f, f/2 and 2f. Data is collected and averaged either at large (60) data points over the measured distance at a slow ramp rate or for very high diffusivity materials, such as diamond, measurements are made for a long time (600 sec) at two discrete measurement positions. A program to perform Discrete Fourier Transformation of the averaged signals in the frequency range 0.01 to 2Hz then provides the appropriate amplitude and phase shift data to the personal computer at a rate of 1 data per second. Analysis of the resultant data is undertaken using MS-Windows 3.1 to provide separate values of DA* and Dp* from which D is then obtained from $(Da^*Dp^*)^{1/2}$.

VALIDATION EXPERIMENTS

Two series of measurements were carried out in air at room temperature (25 ± 0.5°C); the first to illustrate the range of materials for which the technique is suitable and the second to compare the results obtained by this technique with those by the traditional modified ac calorimetry method.

For the first study a number of materials having accepted recommended thermal properties[9] or measured values by acceptable techniques used at national standard laboratories. These include three metals, a ceramic, a glassy carbon, a glass and a polymer. These covered a thermal diffusivity range of approximately 0.001 to 1 cm^2/s. Details of the materials are contained in Table 1.

TABLE 1

DETAILS OF MATERIAL			
Material	**Material Source**	**Size, mm**	**Data Source**
99.99% O_2 free copper	Nialco	30x5x0.05	CINDAS Recommended
99.99% Ni	Goodfellow	30x5x0.05	"
304 Stainless Steel	Nialco	30x5x0.05	"
Referceram ALI	Japan Fire Ceramics Centre	30x5x0.5	NRLM, [10]
Glassy Carbon GC-20	Tokai Carbon Co.	30x5x0.7	NRLM, [11]
Pyrex Glass	Manufacturer	30x5x0.05	CINDAS Recommended
Plexiglas (acrylic)	National Physical Laboratory	30x5x0.5	Transfer Standard Material

Measurements were undertaken on these materials using the normal slow scanning movement technique over a distance of 3mm some 15 to 18mm from one end.

For the second series of measurements the three "rectangular bar" 50x4x0.3 to 0.4mm CVD diamond films used in the first Round Robin study [12] carried out some three years or so ago were obtained from the National Institute of Standards and Technology, USA. In the overall Round Robin a number of different configurations of the same materials had been measured by ten international organisations using a variety of methods. The rectangular bars chosen to have thermal diffusivities in the range 2 to 10cm^2/s were among those measured by several methods. However, the traditional modified ac calorimeter technique was the only one where more than two organisations including Sinku Riko, used the same experimental method and procedure. The three materials were measured in the present apparatus using the two point long time interval technique.

RESULTS AND DISCUSSION

The results for the two series of measurements are presented in Tables II and III respectively.

TABLE III

THERMAL DIFFUSIVITY OF VARIOUS MATERIALS		
	Thermal Diffusivity cm^2/s	
Material	**Present Work**	**Comparative Data**
99.99% O_2 free copper	1.174 ±3%	1.17
99.99% Ni	0.225 ±3%	0.229
304 Stainless Steel	0.034 ±3%	0.035
Referceram ALI	0.103 ±3%	0.104 ±3%
Glassy Carbon GC-20	0.065 ±3%	0.0603 ±4%
Pyrex Glass	*	0.00793
Plexiglas (acrylic)	*	0.00128 ±2%

*higher values than acceptable levels obtained in air environment

TABLE IV

THERMAL DIFFUSIVITY OF THREE ROUND ROBIN CVD MATERIALS			
Thermal Diffusivity by Modified ac calorimetry, cm^2/s			
	Laser Scanning	Traditional	
Material	**Sinku Riko**	**Sinku Riko**	**Range for 3 Organisations**
LB-X (high)	8.56	8.36	8.36 - 9.97
LB-T (Intermediate)	6.75	6.57	6.57 - 8.2
LB-E (low)	2.25	2.28	2.28 - 2.5

Figure 4 contains the experimental data illustrating the expected linear relationship of amplitude and phase shift with distance from which Da* and Dp* are obtained. Figures 5 and 6 show the value of D obtained from curves such as those shown in Figure 4 for copper and glassy carbon respectively.

The results on the first series of materials indicated that the technique is suitable for measurements on a broad range of materials having bulk thermal diffusivity values in the approximate range 0.05 to $1 cm^2/s$. All values agree to within 5% or better with recommended values or measured values undertaken at national standards laboratories. However, it is seen that measurement in air on very thin samples of such materials as glass ($D \sim 0.08$) or thick samples of much lower thermal diffusivity ($D \sim 0.001$) materials such as polymers do not give good results. This is due to the influence of the air film as discussed for both the

traditional and the present technique. The system is now being modified in order to undertake measurements in vacuum thus extending the overall range of materials and thicknesses that can be investigated. The variation of D with temperature up to the order of 500°C is also being investigated.

The results for the diamond films are in very good agreement with these measured by the same authors using the traditional technique. It is believed that in addition to possible experimental errors in the various techniques, there could have been inhmogenities in the various specimens supplied for these measurements. For example, in the modified ac calorimeter technique results between the three laboratories differed by more than the stated experimental error for the method, ranging from over 10% to less than 5%. However, in the total study, the differences ranged up to ±40% for some of the samples. As a result of these uncertainties a second Round Robin has just been concluded on various CVD diamond films and other ceramic and metal samples. The results are being analysed and are to be published shortly.

One of the most interesting observations concerns the apparent divergence between Da* and Dp* as the frequency increases especially for the case of thin samples of the high thermal diffusivity metals. This phenomenon does not appear to affect the final value of D. Currently this issue is being studied further both analytically and experimentally especially to see if there is any effect of the thermocouple wire size. The results obtained on the three metal samples using the 0.1mm diameter thermocouples are in very good agreement with those obtained by the traditional method using 0.025mm diameter wires. The thicker wires had to be used in the current technique in order to have a sufficiently low thermal resistance to provide measurable signals.

SUMMARY

A modification of the ac calorimetric method for measuring in-plane thermal properties of thin samples has been developed and its performance validated with the use of a variety of materials covering a broad range of thermal diffusivity. Further work is in progress to extend the ranges of thermal diffusivity and temperature for thinner and smaller specimen configurations.

REFERENCES

1. Hatta, I., Sasuga, Y., Kato, R. and Maesono, A. 1985, Rev. Sci. Instrum. 56, 1634.

2. Hatta, I., Kato, R., Gu, Y. and Maesono, A. 1994, Thermal Conductivity 22, Ed T. Tong, Technomic Publishing Co. Lancaster PA. pp 461-472.

3. Maesono, A., Kato, R., Hatta I. and Tye, R. 1994, Ibid, pp 473-485.

4. Hatta I., Kato, R. and Maesono, A. 1989, Proc. Second Asian Thermophysical Properties, Japan Thermophysical Properties Society, Tokyo, pp 133-135.

5. Kato, R., Maesono, A. and Hatta I. 1991, Proceedings of 12th Japanese Symposium of Thermophysical Properties, Japan Thermophysical Properties Society, Tokyo, pp 25-28.

6. Kato, R., Maesono, A., and Hatta I. 1993, Jpn. J. Appl. Phys. 32, 3656.

7. Gu, Y., Tang, X., Xu, Y. and Hatta I. 1993, Jap. J. Appl. Phys. 32, L1365.

8. Gu, Y., Zhu, D., Zhu, L. and Ye, J. 1993,High Temperatures-High Pressures 25, 553, 13 ECTP Proceedings pp 381-387.

9. Thermophysical Properties of Matter, Vols 10 & 11, 1973, Eds. Y.S. Touloukian, R.W. Powell, C.Y. Ho & M.C. Nicolau, Plenum Press, New York.

10. Baba, T. and Ono, A. 1995, Proc. Fourth Asian Thermophysical Properties, Japan Thermophysical Properties Society, Tokyo, pp581-584.

11. Ogawa, M., Mukai, K., Naito, M. and Baba T. 1996, Proceedings of 17th Japanese Symposium of Thermophysical Properties, Japan Thermophysical Properties Society, Tokyo, pp 339-342.

12. Feldman, A. 1995, Applications of Diamond Films and Related Materials Third International Conference, Eds. A. Feldman, Y. Tzeng, W.A. Yarborough, M. Yoshikawa & M. Murakama, N.I.S.T. Washington DC, pp 627-630.

FIGURE CAPTIONS

Fig. 1 Schematic arrangement of laser diode source and rotating polygonal mirror system to irradiate test samples.

Fig. 2 Distribution of thermal energy across a test sample.

Fig. 3 Instrumented sample holder.

Fig. 4 Results for stainless steel (SU 304): ln amplitude and phase shift versus distance.

Fig. 5 Thermal diffusivity of 99.99% Oxygen free copper.

Fig. 6 Thermal diffusivity of a glassy carbon.

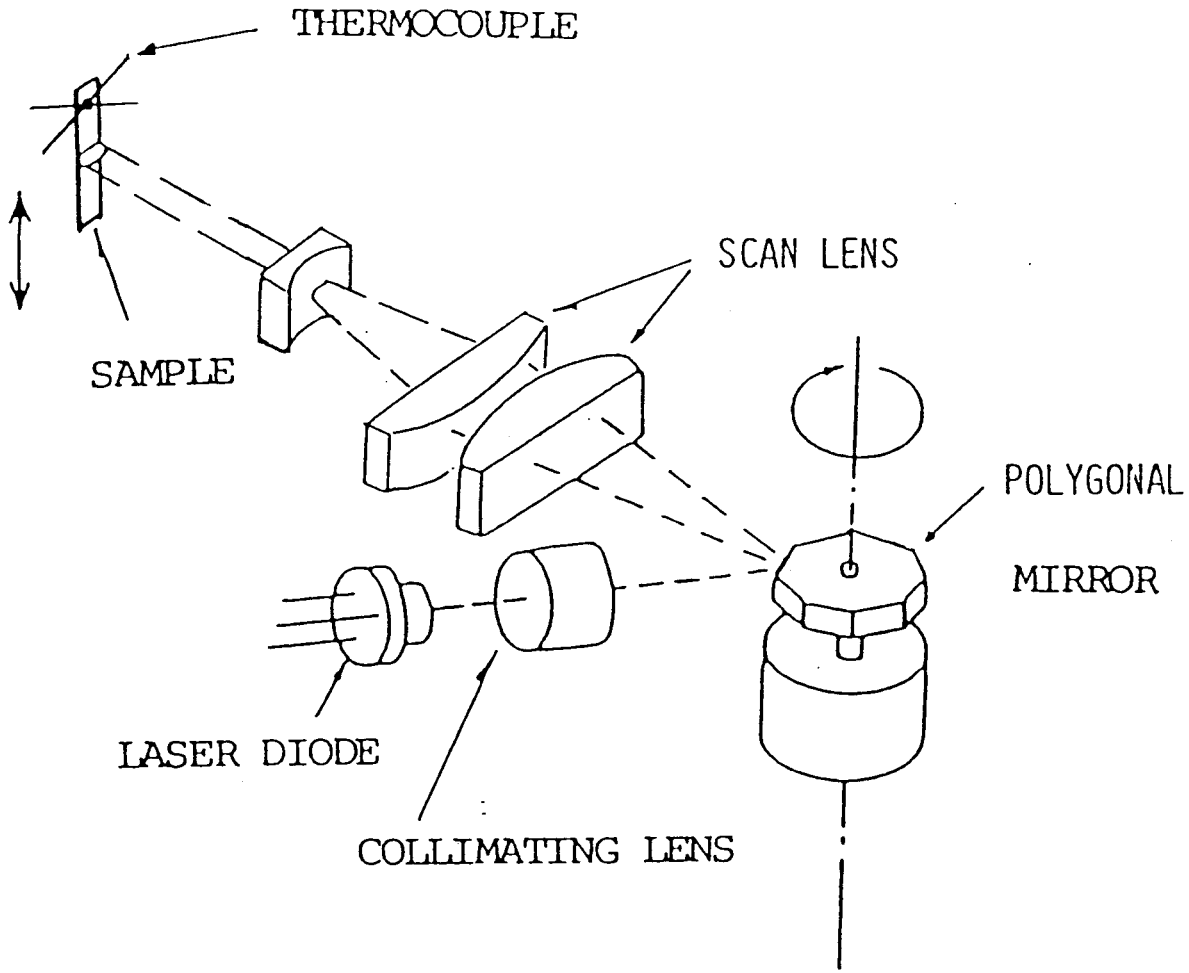
THERMOCOUPLE
SCAN LENS
SAMPLE
POLYGONAL
MIRROR
LASER DIODE
COLLIMATING LENS

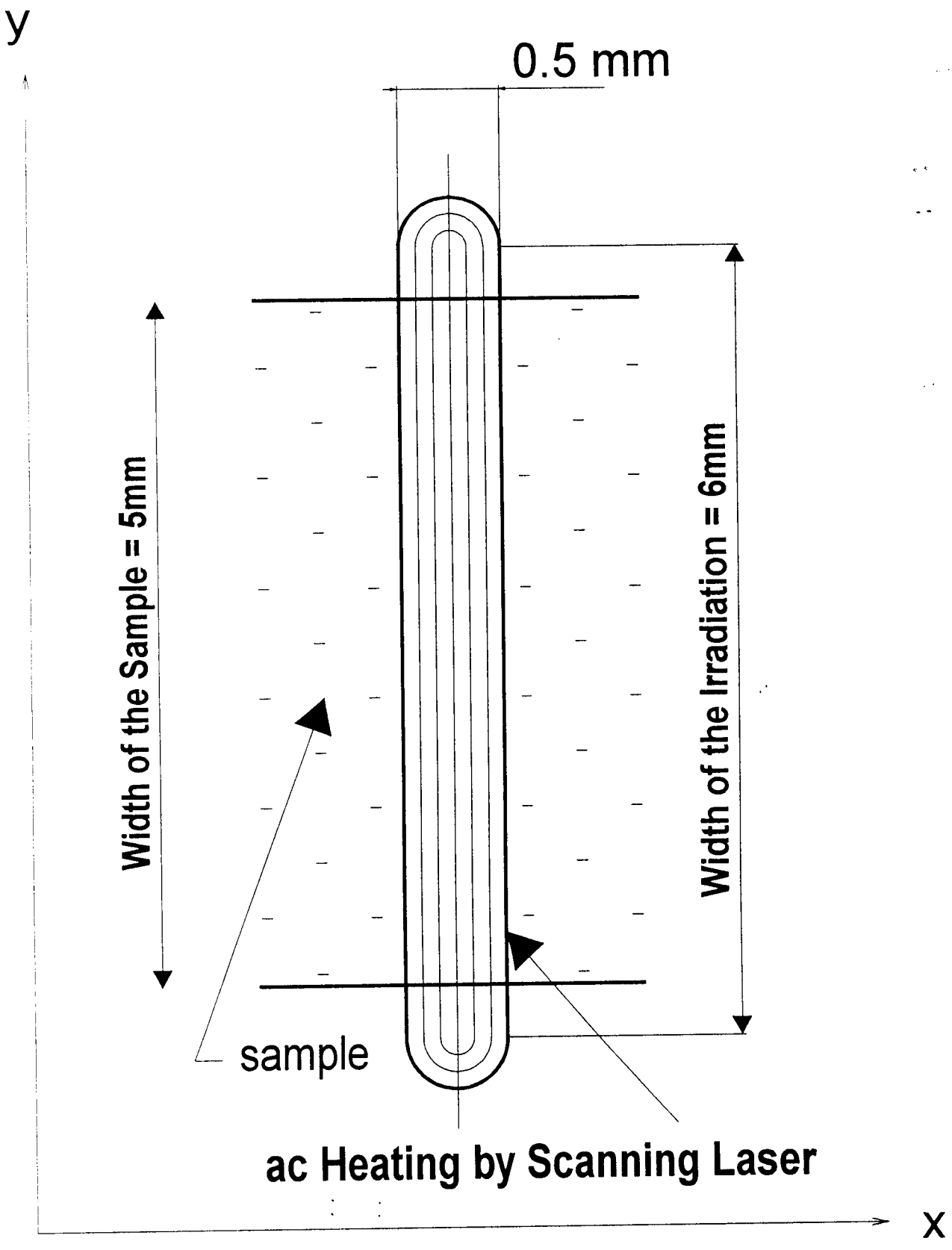
y
0.5 mm
Width of the Sample = 5mm
Width of the Irradiation = 6mm
sample
ac Heating by Scanning Laser
x

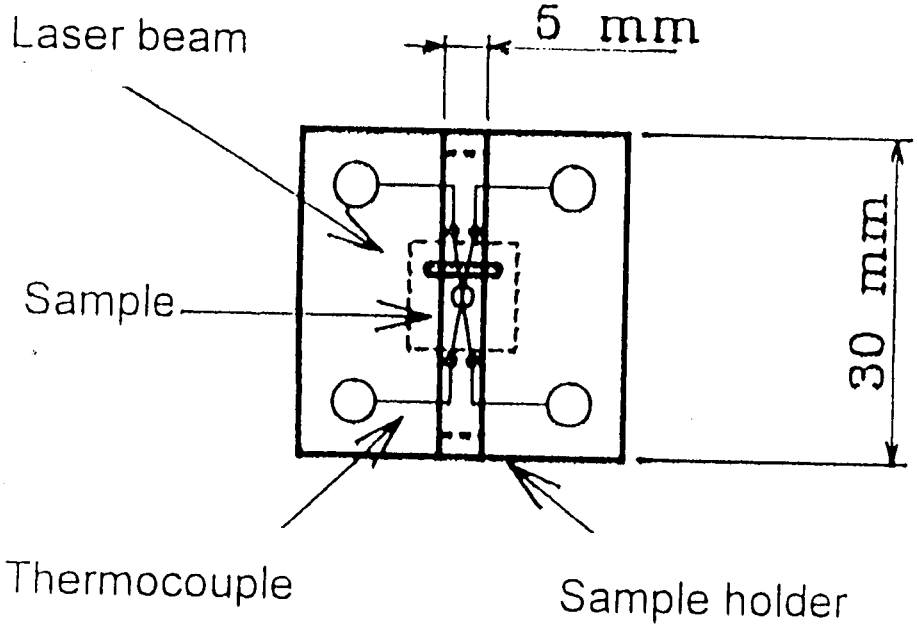
Laser beam
5 mm
Sample
30 mm
Thermocouple
Sample holder

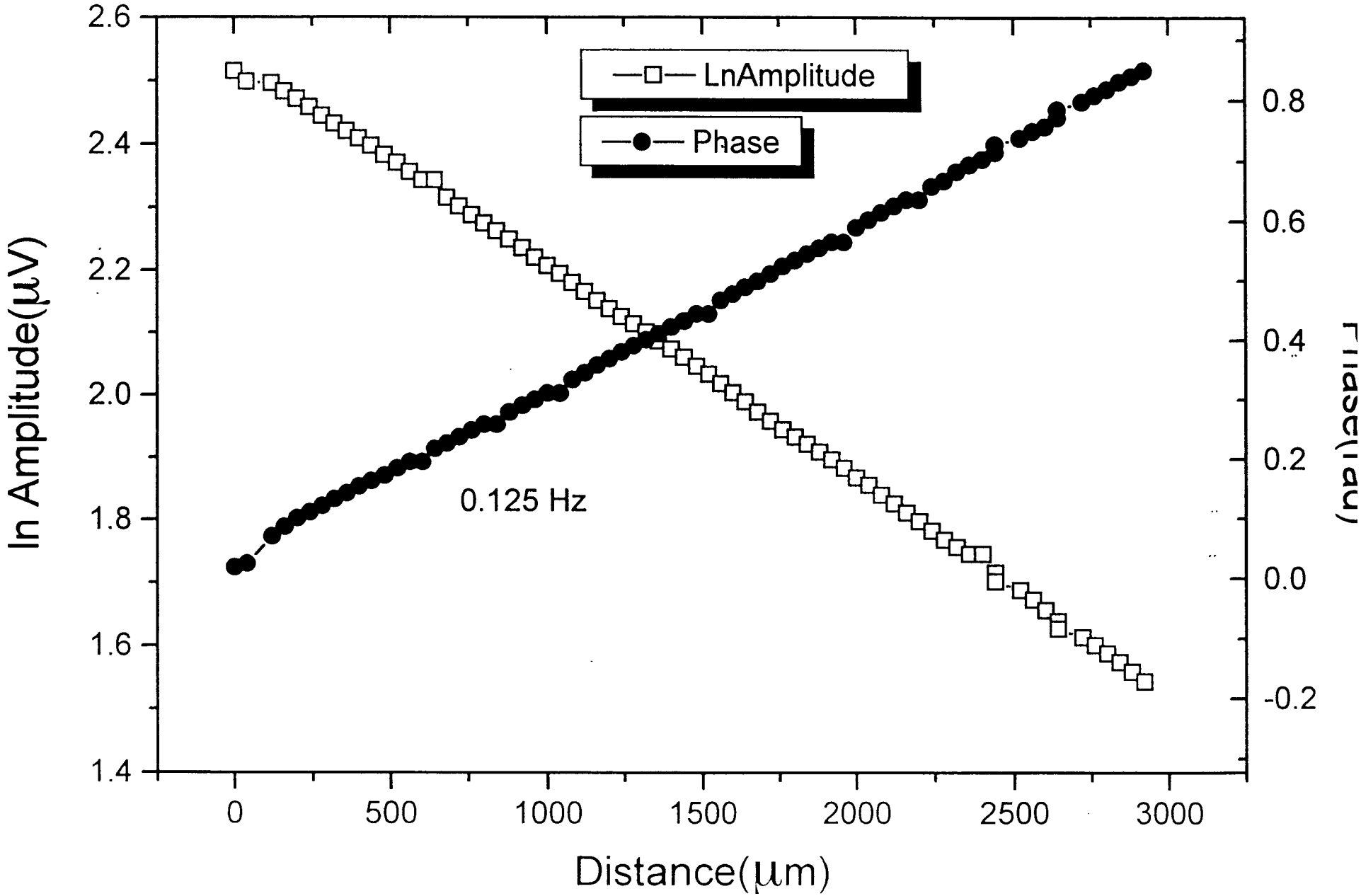
LnAmplitude
Phase
0.125 Hz
ln Amplitude(μV)
Phase(rad)
Distance(μm)
2.6
2.4
2.2
2.0
1.8
1.6
1.4
0.8
0.6
0.4
0.2
0.0
-0.2
0
500
1000
1500
2000
2500
3000

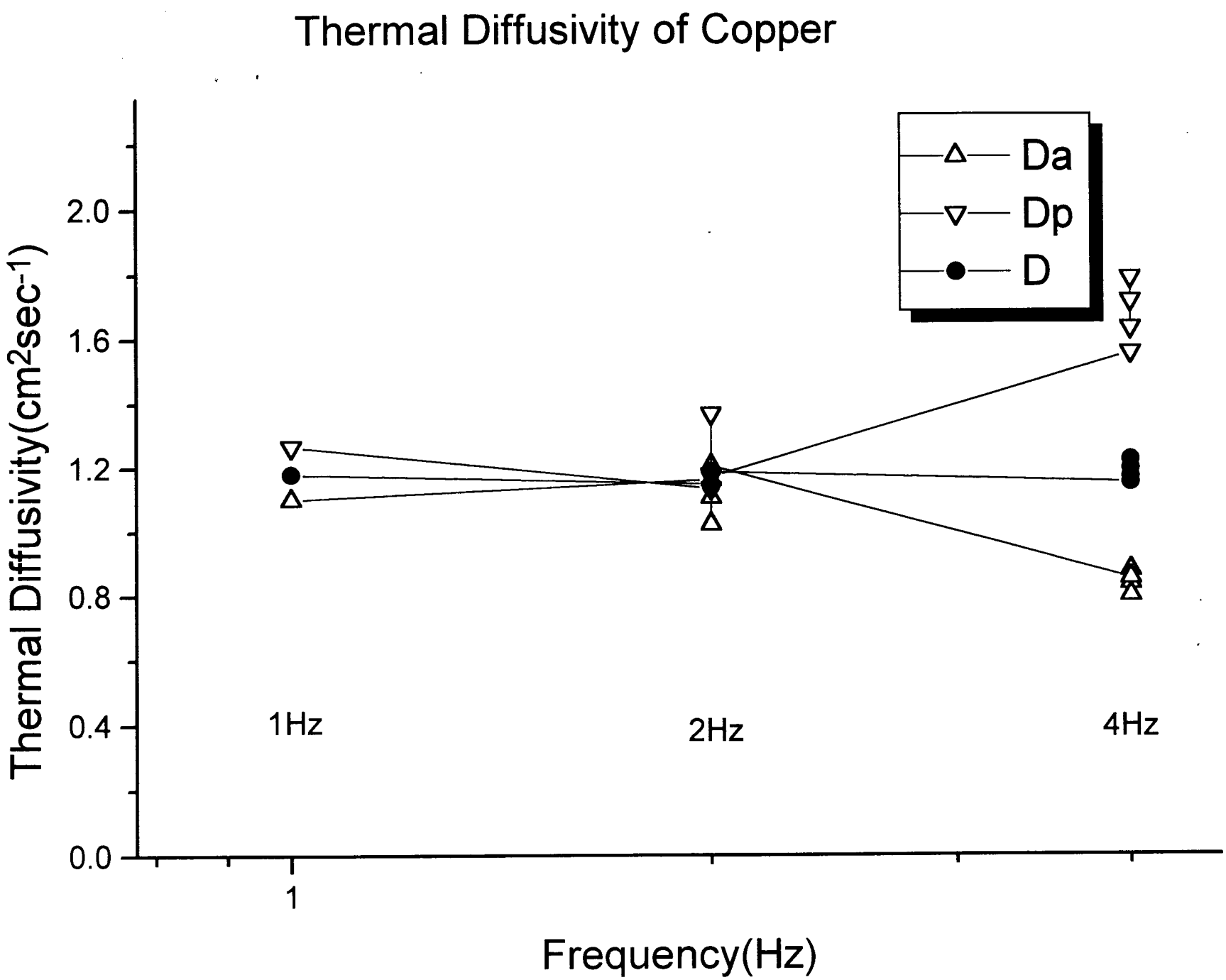
Thermal Diffusivity of Copper
Da
Dp
D
2.0
1.6
1.2
0.8
0.4
0.0
Thermal Diffusivity(cm2sec-1)
1Hz
2Hz
4Hz
1
Frequency(Hz)

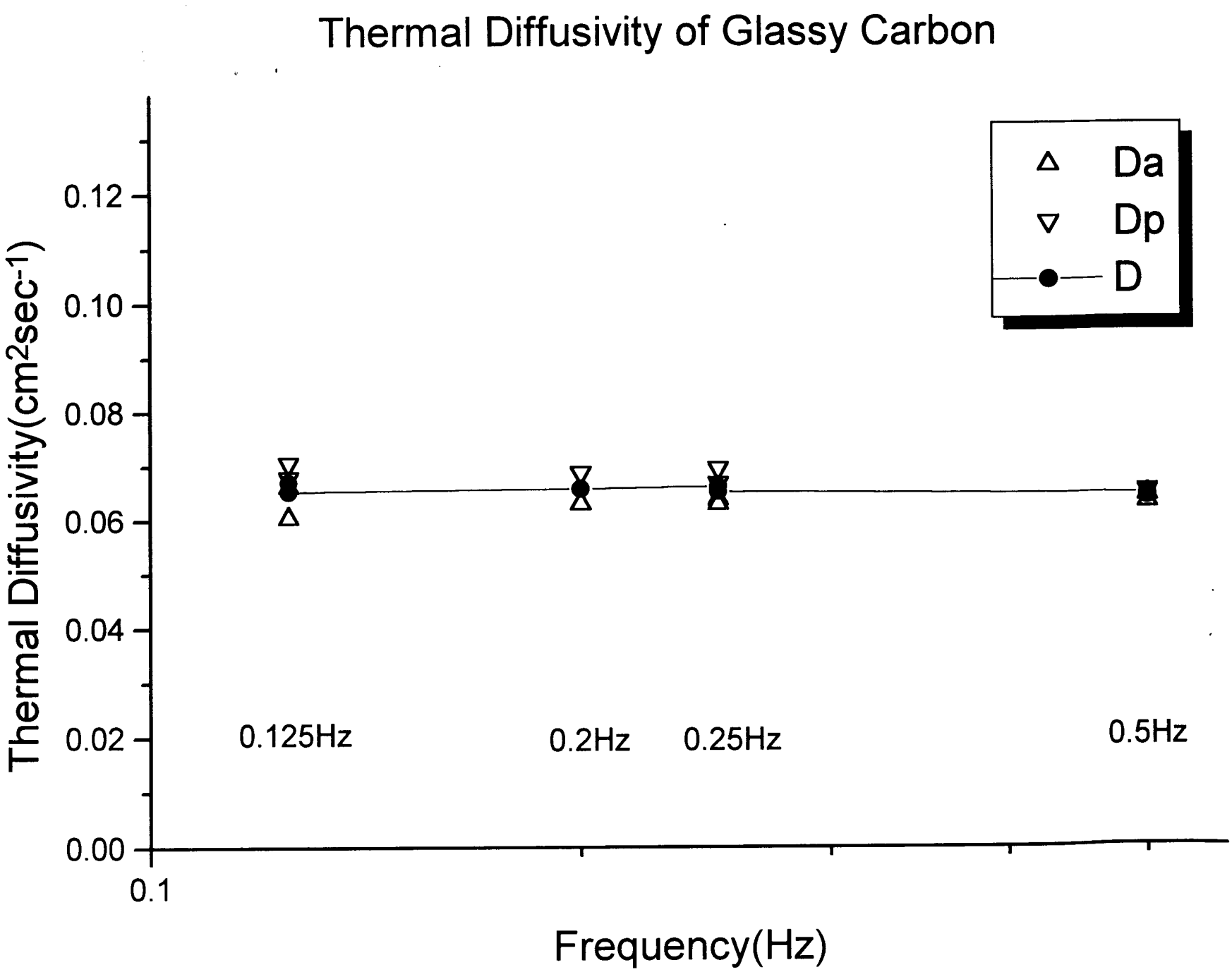
Thermal Diffusivity of Glassy Carbon
Da
Dp
D
0.12
0.10
0.08
0.06
0.04
0.02
0.00
0.1
0.125Hz
0.2Hz
0.25Hz
0.5Hz
Thermal Diffusivity(cm2sec-1)
Frequency(Hz)