Thermal Contact Resistance : Experiment vs Theory[1]

L. Dumont,[2,3] C. Moyne,[2] and A. Degiovanni[2]

---

[1] Paper presented at the Thirteenth Symposium on Thermophysical Properties, June 22-27, 1997, Boulder, Colorado, U.S.A.

[2] Laboratoire d'Energétique et de Mécanique Théorique et Appliquée, C.N.R.S. - I.N.P.L. - U.H.P., 2, av. de la Forêt de Haye, B.P. 160, 54504 Vandoeuvre-lès-Nancy, France.

[3] To whom correspondence should be addressed.

ABSTRACT

Knowing the thermal resistance value associated with an asperity, a model for the thermal contact resistance of a given interface is obtained by considering that each asperity of surfaces in contact is a flux tube.

Calculation of any of the thermal conductances depends on the contact radius of each asperity. This radius increases with load, as asperities are compressed. Contact area is calculated for a plastic load. Values of thermal contact conductance (or resistance) are compared with experimental results.

KEY WORDS: constriction; real area of contact; surface model; thermal contact resistance.

1. INTRODUCTION

Characterization of the thermal contact between two solid bodies pressed together is very important in various industrial applications, such as in aeronautics or automobile. A temperature gap appears at the interface, which is usually modeled by a thermal contact resistance (T.C.R.), according to electrical analogy in steady state. This difference results from the low number of contact points (and thus a low contact area). The heat flow is then constricted near the asperities actually in contact. The total contact resistance can be modeled as combination of three thermal resistances: asperity, constriction and interstitial fluid. During the last twenty years, the T.C.R.'s determination has been a constant care for researchers, from both a tribological and a thermal point of view [1].

The thermal model developed in steady state by Degiovanni *et al.* for a cylindrical asperity of contact radius b, apparent radius a and height d, has been applied to surfaces made of spherical asperities of same radius, where heights follow a gaussian distribution. In order to apply this thermal model, the evolution of the geometrical properties of the interface under load should be characterized. The real and apparent contact areas are determined for each spherical asperity, thanks to a mechanical model which allows the presence of both elastic or plastic deformations for a modeled loaded surface. The influence on the thermal contact resistance can be studied from the coupling between thermal and mechanical models.

2. THEORY

If one considers that both interstitial fluid and asperity are flux tubes, heat transfer between two solids through a much smaller area of contact is formalized as :

$$R_c = \frac{\Delta T}{\Phi} \tag{1}$$

where R_c is the thermal contact resistance, ΔT is the temperature gap at the interface and Φ is the heat flow across the contact area. For a cylindrical asperity as shown in Fig.1 a), the T.C.R. may be written as :

$$r_c = \frac{1}{\dfrac{1}{r_{ct} + r_a} + \dfrac{1}{r_f}} \tag{2}$$

with :

$$r_f = \frac{\delta_1 + \delta_2}{\lambda_f \, \pi \, a^2}, \qquad \textit{(fluid resistance)}$$

$$r_a = \frac{\delta_1}{\lambda_{1a} \, \pi \, b^2} + \frac{\delta_2}{\lambda_{2a} \, \pi \, b^2} \qquad \textit{(asperity resistance)}$$

$$r_{ct} = \frac{A_0}{\pi \, b}\left(\frac{1}{\lambda_1} + \frac{1}{\lambda_2}\right) \qquad \textit{(constriction resistance)}$$

where $A_0 \approx 0.848 - 1.093 r^*$, and $r^* = \dfrac{b}{a}$ is the ratio of the flux tube and cell radius respectively. The previous thermal cell is equivalent to Fig.1 b). [2]

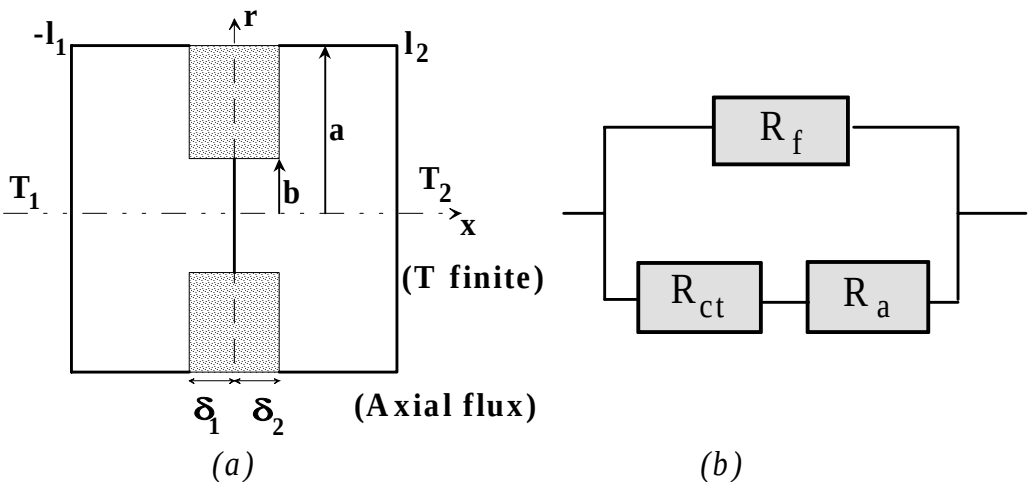

Fig. 1. Thermal cell

Constriction resistance is usually dominant over the asperity one. Thus, under vacuum when the fluid influence is neglected, the main part of the thermal contact resistance is only dependent on geometrical variations within the contact areas.

3. BUILDING AN EQUIVALENT SURFACE

3.1. Ways of increasing r^*

For a given contact, the apparent area of contact is well defined. Unfortunately, the highest difficulty comes from determining the real area of contact, *ie* the amount of solid surface sollicitated. When load increases, thinking that the real area of contact increases either comes naturally. Thus the ratio of the contacting surface on the total surface strictly follows load variations, if consequences of hardening are neglected.

So increasing r^* symbolizes a load increase. This may be done, for instance, through increasing b with a constant, or decreasing a with b constant. The former is typical for a model made of numerous caps of same radius and height. Reporting this in eq. 2 leads to $R_c = K_1/\sqrt{P}$. The latter is representative of cylindrical asperities of same radius and various heights, leading to $R_c = K_2/P$, as in Fig. 2.

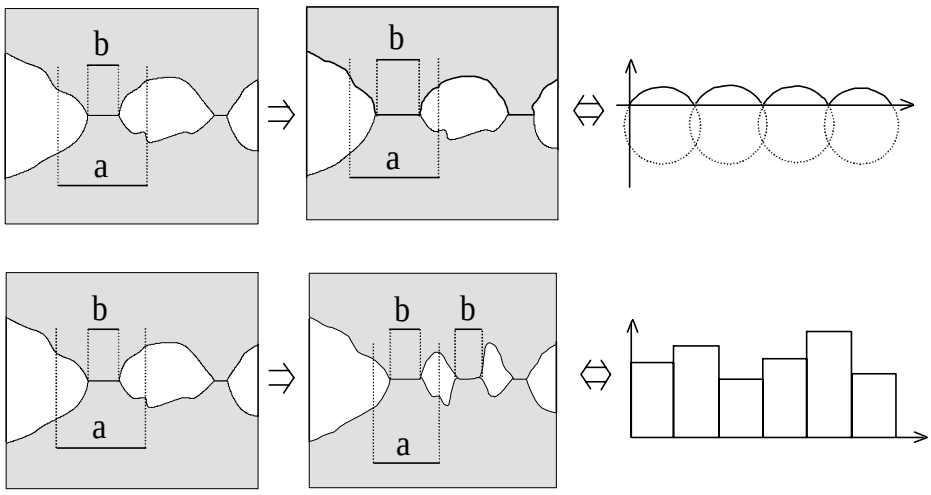

Fig 2. Two ways of increasing r^*

The above results being obtained for two extremal and opposite ways of increasing contact area, the thermal contact resistance is tied to the nominal pressure P by : $R_c = \frac{K}{P^n}$, with $\frac{1}{2} < n < 1$, which is concordant with experimental results [3].

According to this, the ideal surface to which apply the thermal model is covered with caps of same radius R, whose heights distribution follows a statistical function Γ, of standard deviation σ and mean height <h>. Γ depends on surface machining, and is for instance gaussian for a bead-blasted surface.

3.2. Calculating contact areas under pressure

First of all, the classical hypothesis is made of a contact with an infinitely rigid plane meeting a surface of roughness equal to the sum of the roughnesses of the two real surfaces.

Both solids in contact are considered elastic, fully plastic in their behaviour. The rigid plane being at a given height d, each asperity of radius R, whose initial height h is greater than d, can undergo either purely elastic or purely plastic deformation. If depth is less than the limit predicted by Hertz for purely elastic deformation of spherical caps, the hertzian theory is used to calculate both bearing area of the cap and effective load. On the other hand, if contact pressure is greater than Vickers hardness H_v of the material, the volume of the cap is supposed a constant, and the asperity still a truncated cap of same apparent area, and of new radius R_2, in order to obtain the real area of contact for this asperity.

$$R_a = \sqrt{h\left[2R - h\right]}$$

$$V_p = \frac{\pi}{3} h^2 \left[3R - h\right]$$

$$R_2 = \frac{R_a^{\ 2}}{2h_2} + \frac{h_2}{2}$$

$$b^2 = \left[h_2 + e - h\right]\left[2R_2 - h_2 - e + h\right]$$

with R_a being the apparent contact radius, R_2 the curvature radius of the cap during deformation, R the initial radius of the cap, Vp the volume of the cap before deformation, and e=h-d is the penetration depth (cf fig. 3).

h_2 is solution of :

$$3h_2^{\ 2}(h-e)^2 + 2h_2[(e-h)^3 - e^3 - \frac{3V_p}{\pi} + 3R_a^{\ 2}(h-e)] - 3R_a^{\ 2}[h-e]^2 = 0 \qquad (3)$$

A limit to this model is that the new curvature radius R_2 should not be smaller than the apparent contact radius R_a. Thus h_2 is solution of :

$$x^3 - 3R_a x^2 - \frac{3V_p}{\pi} + 2R_a^{\ 3} = 0$$

$$\text{with}: \quad x = R_a + e - h$$

$$\text{and}: \quad 0 < x < R_a$$

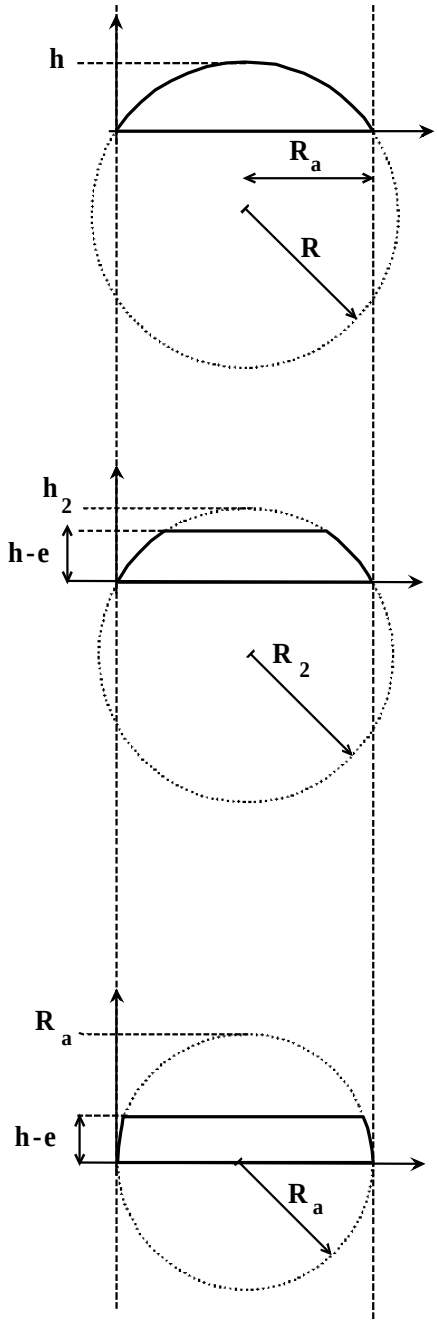

Fig. 3. Plastic deformation of a spherical cap

The evaluated contact radius b is used in the expression of the T.C.R. given in Eq. 2.. Each asperity being considered isolated of its neighbours, all these micro-

conductances are summed to calculate the total T.C.R., resistances of the asperities being in parallel :

$$C_c = \frac{1}{R_c} = \left(\sum_{caps} \frac{1}{r_{ct_i}} \right) \left(\sum_{caps} \frac{1}{\pi a^2} \right) \tag{4}$$

The loads upon truncated caps are summed either, and divided by the apparent area of contact in order to obtain the nominal pressure P, for a given penetration depth.

The pressure dependence of thermal contact conductance C_c has been predicted for aluminium and steel contact pairs, with standard deviation and mean summit radius taken from [4]. An example of obtained results has been reported in Fig. 4, for a CRES 304-steel pair contact. Results are in good agreement with both experimental results and the modified Greenwood and Williamson purely elastic model. However, when sollicitated under pressure, caps near immediately undergo plastic deformation, so elastic deformations are neglected.

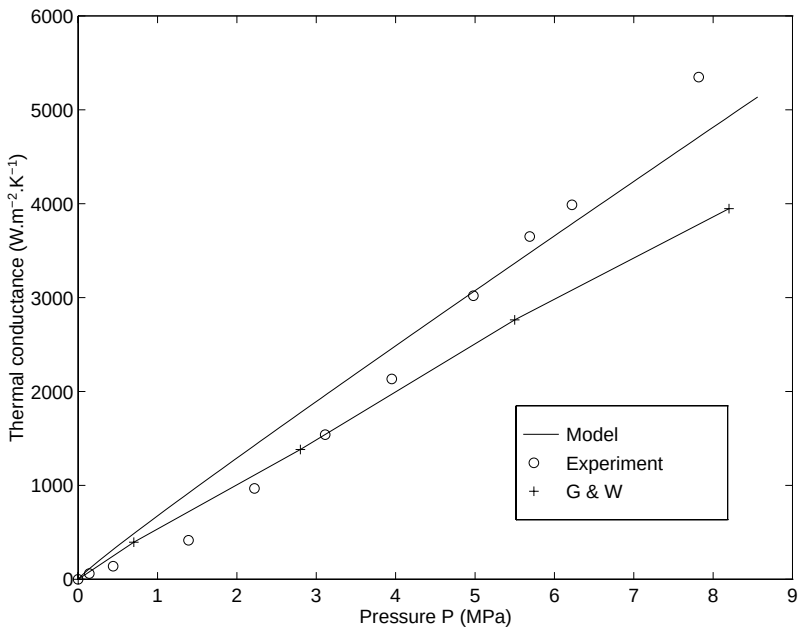

Fig. 4. Validation of the model for a CRES 304 steel pair

Values predicted by the model slightly differ from experimental data at low loads, results are still compatible with experimental plots for a similar material. One of the main problem is to correctly evaluate R and σ, that is, radii of the highest summits are dominant over the mean radius that can be extracted from statistical processing, in the role they play.

4. EXPERIMENTAL RESULTS

4.1. Thermal contact resistance measurements

Experimental measurements have been obtained from a guarded hot-plate experiment, under pressures ranging from 0 to 5000 Pa. Samples, of square area and equipped with Cr-Al thermocouples, were pressed together, between two Bi_2-Te_3 fluxmeters. Sensibilities of the fluxmeters were evaluated under each of the pressures, both before and after a complete load cycle, in order to take into account effects of strength hardening. The thermal flux was controlled by a sub-cooler beneath the lowest sample and a plane heater made of a thin coil within a copper block. Load was measured with a dynamometer, and the stack was then put under vacuum. The experimental apparatus is shown in Fig. 5.

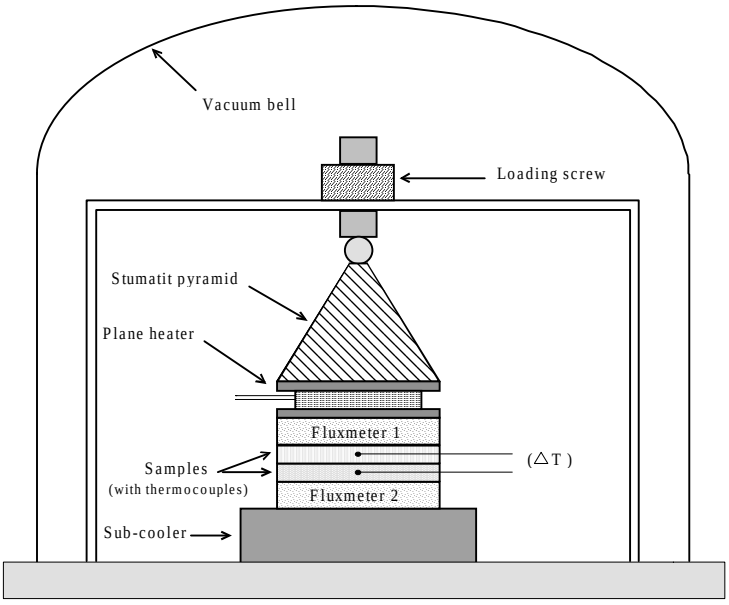

Fig. 5. Guarded hot-plate axperiment

When the thermal equilibrium was reached for a given pressure P, the temperature jump ΔT at the interface and thermal flux ϕ were measured, and the T.C.R. evaluated. Sample pairs of various materials and machining were tested. Surfaces were also mapped, and data processed in order to get parameters necessary to the model.

4.2. Number of contacting zones

By considering that every contact plot deforms in a plastic way, the number of contacts can be evaluated from the measured T.C.R. of a sample pair, using the thermal model. As shown in Fig. 6, the number of contact plots increases linearly at high values of load.

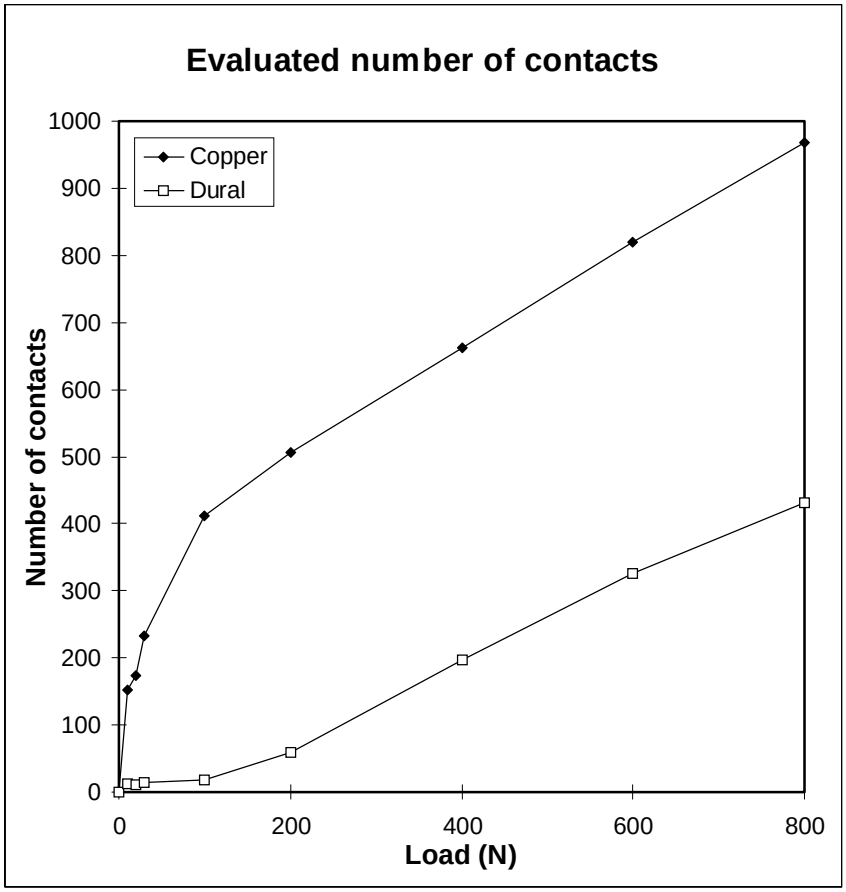

Fig. 6. Variation of number of contacts as a function of load

This confirms the fact that the appearance of new, elastically deformed asperities, does not noticeably modify the actual contact area, in comparison with the influence of plastic deformation. On the other hand, at low loads, results do not evolve likewise. More, it clearly appears that slopes are very different for copper and duralumin. As both pairs were first rectified, then the dural-dural contact pair was bead-lapped with medium beads, and the copper-copper pair bead-lapped with small beads, the evolution of the evaluated number of contacts can be related to the machining of surfaces, and especially to the size of the beads used to smooth the samples.

Nevertheless, evolution the predicted number of contacts incites to think that any statistical study of the profile should be done only on the highest asperities. So, though results given by the model are concordant with measured T.C.R., characterization of surface-describing parameters has to be improved yet, to only take into account the highest, biggest summits during the statistical processing of profile measurements.

5. THREE CONTACT-POINTS MEDIUM

In order to better understand the way the increase of actual contact area modifies the value of the TCR, we tried to reproduce what occurs at the very beginning of the contact, for the highest asperities, but to a much more observable scale, and for a known number of contacts.

A high-quality lead sample of parallelepiped shape (40 mm side), with three caps of radius and height 4 mm on its upper side, has been moulded and put in contact with a steel sample under vacuum to get its T.C.R. evolution under pressure.

Mechanical and thermal parameters of lead and steel were measured, and the apparent contact radius, a, was calculated :

$$a \approx \sqrt{S/3\pi} \tag{5}$$

Using the hypothesis that every cap undergoes almost immediately plastic deformation, the real contact radius was next evaluated, for each applied load:

$$b \approx \sqrt{\frac{F}{3\pi H_v}} \tag{6}$$

Eq. 2 was then used to calculate the theoretical value of the T.C.R. for this contact. Curves are to be found in Fig. 7.

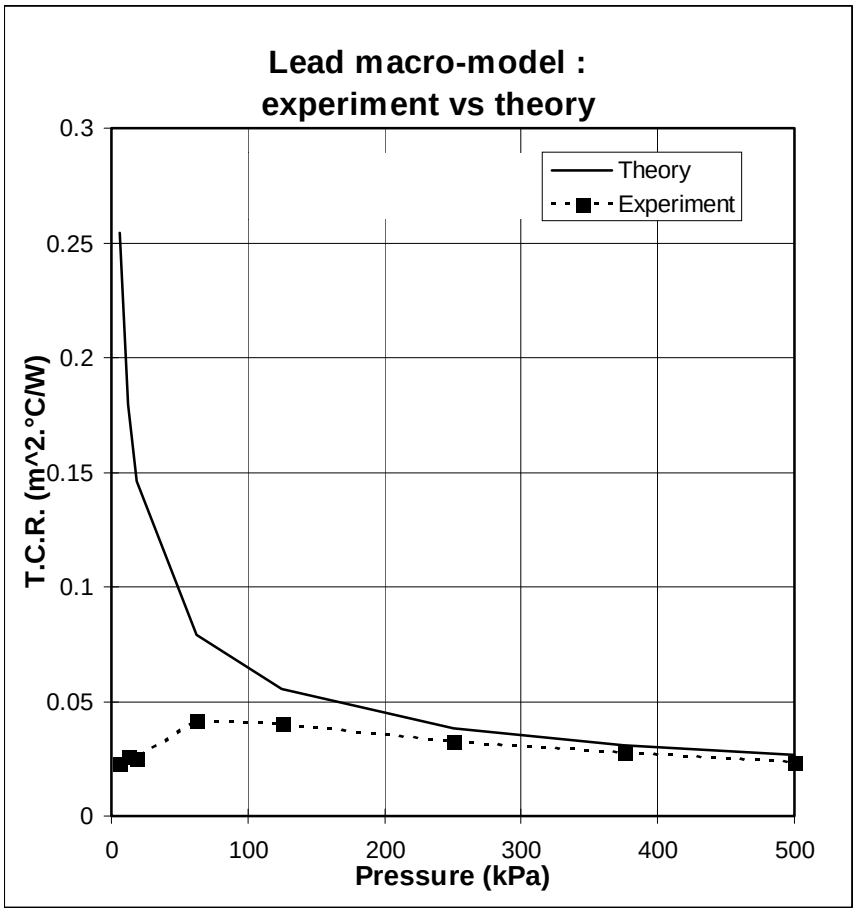

Fig .7. Lead macro-constrictions : experiment and theory

The contact radius of a cap was measured at the end of the experiment, for a nominal pressure of $5\ 10^5$ Pa, and its value was $0.38\ 10^{-3}$ m after elastic recoverance, while the radius b of a thermal cell was evaluated to $0.8\ 10^{-3}$ m. This shows that such a way of fixing the number of contacts is irrelevant, and that there are doubtlessly macro-constriction phenomena on the three contact surfaces of the caps. In this case, measurements were made on contact zones, rather than on asperities, which does not invalidate the model, but clearly shows scale problems between the size of a thermal cell, and the average size of an asperity.

6. CONCLUSION

The model developped for evaluation of T.C.R. evolution under pressure gives quite satisfactory results, according to both experiments and other often used models. Results may be improved by a better evaluation of surface-describing parameters, because as contact occurs, a very small number of asperities are sollicitated. Most of these asperities undergo plastic deformation, but strength hardening was neglected. One improvement would be to take this into account, if T.C.R. evolution under pressure is to be predicted for load cycles.

REFERENCES

1. L.S. Fletcher, *J. Heat Transfer* **110**: 1059 (1988)

2. A. Degiovanni, C. Moyne, *Rev. Gén. Therm. Fr.* **334**: 557 (1989)

3. T.H. McWaid, E. Marschall, *Wärme- und Stoffübertragung* **28**: 441 (1993)

4. T.H. McWaid, E. Marschall, *Int. J. Heat Mass Transfer. Vol 35*, **11**: 2911 (1992)