A HIGH TEMPERATURE VISCOMETER FOR MOLTEN MATERIALS[1]

Valentim M. B. Nunes

Escola Superior de Tecnologia, Instituto Politécnico de Tomar

Campus da Quinta do Contador, 2300 Tomar, Portugal

and

Fernando J. V. Santos, Carlos A. Nieto de Castro

Centro de Ciência e Tecnologia de Materiais

Faculdade de Ciências da Universidade de Lisboa and ICAT

Campo Grande, 1700 Lisboa, Portugal

[1] Paper to be presented at the 13th Symposium on Thermophysical Properties, to be held in Boulder, Colorado, USA, June 22-26, 1997

ABSTRACT

An oscillating cup viscometer for the measurement of the viscosity of molten materials, from room temperature to 1400 K was developed. The instrument is described in detail and the working equations presented. The operational behaviour was tested with water at room temperature. Preliminary mesurements show that the new viscometer is capable of measuring the viscosity of water at room temperature to within 0.2 %.

As the primary objective of this work is the establishment of standard reference data for high temperature viscosity measurements in molten salts, molten metals and molten semiconductors, a survey of the existing literature for molten KNO_3 is also given.

KEY WORDS: high temperature, molten salts, oscillating-cup viscometer, viscosity

1 INTRODUCTION

The measurement of viscosity of high temperature melts has proven to be a difficult task because of the high temperatures involved and the necessity to account for a variety of phenomena that generally do not occur at low temperature [1]. To measure the viscosity of these materials the oscillating body viscometers seems to be the most appropriate.

Any type of oscillating body viscometers consists on a axial symmetric body suspended from a elastic stand, where he can induce torsional oscillations. The viscosity of the fluid is obtained from the measured decrement of the oscillations. Once an oscillation is induced the fluid will cause a logarithmic decrement of the amplitude of oscillation, and a increase on the period of oscillation. These parameters depend on the viscosity and on the density of the fluid. The only measurements that are necessary, besides pressure and temperature, are mass and time, which can be obtained with high accuracy.

This is an absolute method, so there is not necessary to made any calibration with fluids of known viscosity.

The success of this type of instruments can be illustrated by the different class of fluids for which has been used. It includes gases at high and low pressure [2], water and aqueous solutions [3-6], organic liquids including hydrocarbons [7,8], and molten materials, including molten salts [9,10], metals [11,12] and molten semiconductors [13].

In a overall program to obtain accurate measurements of the viscosity of molten materials to contribute to the establishment of standard reference data, we are interested in the measurement of the viscosity of molten salts, molten metals and molten conductors. The first stage is the determination of data for molten salts. For this kind of materials there are still a few data that can be used as reference data. Since the 60's many workers have provided results with good accuracy for the viscosity of high temperature melts. However there are still

large discrepancies between different laboratories, amounting to 50% for molten NaCl at 1100 K [1]

For potassium nitrate the situation is better. The results of Murgulescu et al. [14], Janz et al. [15], Protsenko et al. [16], Wellman et al. [17], Timidei et al. [18], Dumas et al. [19], Zuca [20], Ohta et al [21], Janz et al. [22], Yokoo et al. [23] and Abe et al. [10] agree within ±4%. These results were obtained by different techniques, including oscillating body viscometers and capillary viscometers. Although the discrepancies are smaller there are still non negligible disagreements between the different sets of data.

The use of oscillating body viscometers was restricted due to the complexity of the mathematical treatment of the equations for the motion of the body. However, Kestin and Newell [24] and Beckwitt and Newell [25] provided solutions for this, triggering its intensive utilisation since 1970.

In section 2 we give an outline of the working equations for the method, that are applicable to our viscometer. In the following sections we describe the instrument projected and constructed in our laboratory and present some preliminary tests.

2. WORKING EQUATIONS

The viscosity calculation is obtained from the imaginary part of a rigorous solution for the oscillating body viscometers, derived by Kestin and Newell [24]. The equation is:

$$(s + D_0)^2 + 1 + D(s) = 0 \qquad (1)$$

where $D(s)$ is a characteristic function and s is the complex frequency of oscillation given by:

$$s = T_0/T(-D \pm i) \tag{2}$$

D and D_0 are the logarithmic decrements of oscillation with and without fluid in units of 2π, i.e, $D = \delta 2\pi$ and $D_0 = \delta_0/2\pi$, and T and T_0 are the period of oscillation of the oscillating body with fluid and in vacuum respectively.

The characteristic function can be an exact solution [24] or an approximate solution derived by Beckwitt and Newell [25]. The last one is:

$$D(s) = s^2 \frac{I'}{I}\left(\begin{array}{l} \dfrac{4}{s^{1/2}\zeta_0} - \dfrac{6}{s\zeta_0^2} + \dfrac{3}{2s^{3/2}\zeta_0^3} + \dfrac{3}{2s^2\zeta_0^4} + \dfrac{1}{s^{1/2}z_0} - \\ -\dfrac{16}{\pi s\zeta_0 z_0} - \dfrac{9}{s^{3/2}\zeta_0 z_0} - \dfrac{8}{s^2\zeta_0 z_0} - \dfrac{exp\left[-2s^{1/2}z_0\right]}{2s^{1/2}z_0} \end{array}\right) \tag{3}$$

where $\zeta_0 = R/(hT_0/2\pi\rho)^{1/2}$ *and* $z_0 = h/(hT_0/2\pi\rho)^{1/2}$ are dimensionless quantities for the inner radius of the cup, R, and height of the fluid in the cup, h, I is the moment of inertia of the suspension system alone, I' is the moment of inertia of the fluid, η is the viscosity and ρ the density of the fluid. $\delta = (hT_0/2\pi\rho)^{1/2}$ is the boundary layer thickness for the oscillatory motion of the fluid.

Equation (3) is applicable when $\zeta_0 >>1$ and $z_0 >>1$. From this general solution the following working equations were derived for the oscillating cup viscometer [26]:

$$(\pi\rho h R^4/(2I))\,[A(Dp + q)x^{-1} - BDx^{-2} - Cpx^{-3} - Dx^{-4}] = 1/q^2 - 1 + (D - D_0/q)^2 \tag{4}$$

$$(\pi\rho h R^4/(2I))\,[A(p - Dq)x^{-1} - Bx^{-2} + Cqx^{-3}] = 2(D - D_0/q) \tag{5}$$

where

$A = 4 + (R/h)$

$B = 6 + (16/p)(R/h)$

$C = 1.5 + 9(R/h)$

$D = 1.5 - (8/p)(R/h)$

$q = T_0/T$

$p = 1/(2(D + (1 + D^2)^{1/2}))^{1/2}$

$q = 1/(2p)$

$x = R(2pr/(hT))^{1/2}$

Equations (4) and (5) are used to calculate the viscosity from the period ratio and the logarithmic decrement respectively. Equation (5) is preferred due to large uncertainties in the term $1/q^2-1$ in equation (4), which is nearly zero. Equation (5) is solved for the viscosity, giving:

$$h = 2prR^2/(Tx^2) \qquad (6)$$

The error of this solutions is smaller than 0.1% when R/h < 1 and x > 10 [26]. In eq. (3) the fluid equations used are the linearized Navier-Stokes equations for an incompressible fluid and are strictly applicable when the motion of the fluid is unidimentional, which we assume to be the case for the present instrument. Also, no effect of the vapour pressure of the vapour above the liquid was considered, assuming that its effect on the overall torque induced in the mechanical system was negligible. Eq. (6) was solved to obtain the viscosity of the liquid by an iterative method using a simple computer program in BASIC language.

3. EXPERIMENTAL APPARATUS

The oscillating cup viscometer is composed of four fundamental systems: an oscillating system (including the suspension system and oscillations initiator), an heating system, a vacuum system and a system for the detection of oscillations. In this section we will describe these systems of the viscometer projected and constructed in our laboratory.

The oscillating system is composed by a Pt92/W8 wire with 0.5 mm of diameter and a length of 603 mm. This material was chosen due to its low internal friction and stable elastic behaviour [27]. This wire is silver-soldered to a special device that permits the suspension of the wire and the manually initiation of oscillations. The other extremity of the wire is silver-soldered to a mirror holder and inertial disk screwed to a suspension bar, made from molybdenum. This bar has 585 mm of length and a diameter of 6 mm, and serves to separate the torsion wire from the high temperatures in the furnace. Screwed to this bar is a molybdenum cup with 17.18 mm of inner diameter. The cup was machined with a precision of ± 0.005 mm, and holds the fluid. Figure 1 shows a schematic diagram of the viscometer, and figure 2 the design and major dimensions of the molybdenum cup.

To obtain the high temperatures we used a vertical tubular furnace (Termolab), composed by a ceramic tube open in both extremities, 700 mm high, and with internal diameter of 60 mm. A PID controller is coupled to this furnace (Eurotherm, model 902 P), allowing a temperature stabilisation within 1 K. Inside this tube there is a stainless steel tube to allow vacuum inside. This tube is attached to the upper parts of the instrument, at room temperature, with adequate flanges. In all this flanges we have viton o-rings to seal the instrument.

The tube of the furnace, and the rest of the instrument, are supported by a central plate, that is about 300 mm above the furnace. This plate was levelled in the plane with the aid of a water level system.

To avoid the conduction of heat to the upper parts, namely to the torsion wire, we have another tube inside the first one supporting radiation shields. The temperature is measured with a type N thermocouple, calibrated up to the silver point, with an accuracy of 0.1 to 0.5 K. This thermocouple is held in axial direction just beneath the bottom of the cup.

Figure 3 shows the measuring system. This system is composed by a He-Ne laser light source (Melles Griot, 632.8 nm, 1 mW of output power), photodetectors (Melles Griot) a time interval counter (Standford Research Systems, model SR620) capable of a resolution of 25 ps, and a computer to control and process the data. The laser is directed to the mirror in the suspension system, and its beam divergence is only 1.35 mrad. The mirror is a highly polished planar steel surface coated with aluminium, forming a reflecting surface for the optical detection system. The period and logarithmic decrement of the oscillations were obtained by measuring the time intervals of the reflected light from the mirror to two photodiodes located about 2 meters from the mirror and 15 cm apart, and coupled to the accurate time interval counter. The period is determined from successive passing of the light reflected from the mirror at a photodetector placed at the centre of oscillation. The logarithmic decrement is also obtained optically by measuring successive time intervals of the light passing trough the two detectors. The precision of the measurement of the decrement and period was estimated to be 0.9% and 0.02% respectively. The logarithmic decrement was calculated by Kestin´s equation [28], which eliminates the necessity of any length measurements.

4. PRELIMINARY TESTS

4.1 Characteristics of the suspension system.

The characteristics of the suspension system were determined at room temperature. The decrement and period of oscillation were obtained as described in previous section. The inner radius of the cup was carefully measured at several heights, and the average value was taken. The moment of inertia of the suspension system was determinate in a usual manner by measuring the period of oscillation of the suspension system with and without a molybdenum ring with known dimensions, and placed on the top of the cup. Table I resumes the main characteristics of the suspension system.

4.2. Viscosity of water

To test the good performance of the instrument we measured the viscosity of water at 19.8 °C. The viscosity of water can be calculated from eq. (6) as the boundary layer thickness d is 0.5 mm and therefore z_0 = 17,2 » 1 and z_0 = 129,0 »1, for water at 20 ºC. Similar values will be found for molten salts. The period and decrement of oscillation were measured with the cup partially filled with water and the values obtained were, T = 1.6690±0.0004 s and d= (5.84±0.05)×10^{-3}.

The density of water was taken from literature [29] to be 998.2474 kgm^{-3} at 19.8 °C. The viscosity was then calculated from equation (6) and a value of h = 1.005 mPa.s was obtained.

The value obtained is only 0.2% lower than the value recommended that is 1.002 mPa.s at 20 °C [30] and 1.007 mPa.s at 19.8 °C [31]. This agreement shows the performance of the instrument.

Table I *Characteristics of the suspension system*

R, mm	8.590±0.005
10^7 I, kg m^2	600±4
T_0, s	1.6622±0.0004
10^{-3} d_0	1.46±0.07

To evaluate the experimental accuracy, the root mean square deviations for the different variables were determined and are presented in Table II. The actual overall accuracy is estimated to be around 3%. The main sources of error are the logarithmic decrement of the oscillation $d$and the moment of inertia of the system I_0 . The accuracy can be improved by a better determination of d(to within 0.2 to 0.3%), and of I_0 (to within 0.3 to 0.4 %), and we hope to report new results for the viscosity of molten potassium nitrate in a near future.

Table II *Analysis of the uncertainty in the determination of viscosity*

Parameter	s_i	s_i , %	Contribution to s_h, %
d	$5\text{x}10^{-5}$	0.9	2.8
T_0	400 μs	0.02	≈ 0
T	500 μs	0.03	0.03
I_0	$4\text{x}10^{-7}$ kg m^2	0.7	1.3
R	5 μm	0.06	0.17
m	$5\text{x}10^{-6}$ kg	0.03	0.03
Total - s_h			3.09

5. REFERENCES

[1] A. Nagashima, *Appl. Mech. Rev*. **41**:113 (1988)

[2] R. Dipippo, J.Kestin, J.H.Whitelaw, *Physica* **32**:2064 (1966)

[3] J.Kestin, I.R.Shankland, *J.Non-Equilib.Thermodyn*. **6**:241 (1981)

[4] D.A.Berstad, B.Knapstad, M.Lamvik, P.A.Skjolsvik, K.Torklep, H.A.Oye, *Physica A* **151**:246 (1988)

[5] K.Torklep, *Int.J.Thermophys*. **14**:989 (1993)

[6] J.Kestin, I.R.Shankland, *Int.J.Thermophys*. **5**:241 (1984)

[7] A.H.Krall, J.C.Nieuwordt, J.V.Sengers, *Fluid Phase Equilibria* **36**:207 (1987)

[8] B.Knapstad, P.A.Skjolsvik, H.A.Oye, *Ber.Bunsenges.Phys.Chem*. **94**:1156 (1990)

[9] K.Torklep, H.A.Oye, *J.Phys.E:Sci.Instrum*. **12**:875 (1979)

[10] Y.Abe, O.Kosugiyama, A.Nagashima, *J.Chem.Soc., Faraday I* **76**:2531 (1980)

[11] H.Tippelskirch, E.U.Franck, F.Hensel, *Ber.Bunsenges.Phys.Chem*. **79**:889 (1975)

[12] J.M.Grouvel, J.Kestin, H.E.Khalifa, E.U.Franck, F.Hensel, *Ber.Bunsenges.Phys.Chem*. **81**:338 (1977)

[13] S.Nakamura, T.Hibiya, *Int.J.Thermophys*. **13**:1061 (1992)

[14] I.G.Murgulescu, S.Zuca, *Z.Phys.Chem*. **218**:379 (1961)

[15] G.J.Janz, F.Saegusa, *J.Electrochem.Soc*. **110**:452 (1963)

[16] P.F.Protsenko, O.N.Razumovskaya, *Zh.Prikl.Khim*. **38**:2355 (1965)

[17] R.E.Wellman, R.DeWitt, R.B.Ellis, *J.Chem.Eng.Data* **11**:156 (1966)

[18] A.Timidei, G.Lenderman, G.J.Janz, *Chem.Instrum*. **2**:309 (1970)

[19] D.Dumas, K.Grjotheim, B.Ogdahl, H.A.Oye, *Acta Chem.Scand*. **24**:510 (1970)

[20] S.Zuca, *Rev.Roumaine Chim*. **15**:1277 (1970)

[21] T.Ohta, O.Borgen, W.Brockner, D.Fermstad, K.Grjotheim, K.Torklep, H.A.Oye, *Ber.Bunsenges.Phys.Chem.* **79**:335 (1975)

[22] G.J.Janz, S.W.Lurie, J.L.Gardner, *J.Chem.Eng.Data* **23**:14 (1978)

[23] T.Yokoo, M.Saito, Y.Kato, T.Ejima, *Nippon Kinzokugakkai Koen Gaiyo* 157 (1978)

[24] J.Kestin, G.F.Newell, *Z.Angew.Math.Phys.* **8**:433 (1957)

[25] D.A.Beckwitt, G.F.Newell, *Z.Angew.Math.Phys.* **8**:450 (1957)

[26] W.Brockner, K.Torklep, H.A.Oye, *Ber.Bunsenges.Phys.Chem.* **83**:1 (1979)

[27] J.Kestin, J.M.Mozinsky, *Report AF 891/11 Brown University, Providence* (1958)

[28] J.Kestin, H.E.Khalifa, *Appl.Sci.Res.* **32**:483 (1976)

[29] K.N.March, ed., *Recommended Reference Materials for the Realization of Physicochemical Properties*, Blackwell Scientific Publishers, Oxford (1987)

[30] J.F.Swindells, J.R.Coe, T.B.Goodfrey, *J.Res.NBS* 48:1 (1952)

[31] J.Kestin, Sokolov, W.Wakeham, *J.Phys.Chem.Ref.Data* **7**:941 (1978)

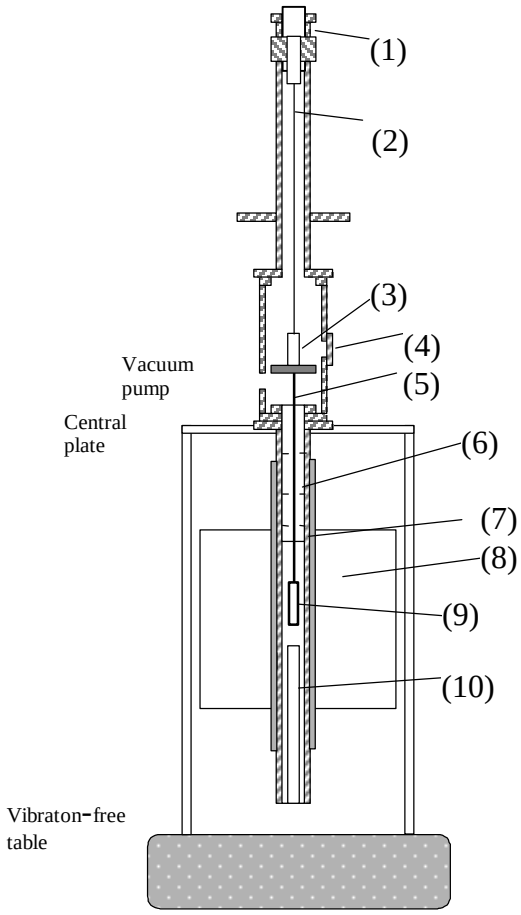

Figure 1. High temperature oscillating cup viscometer. (1) oscillating initiator; (2) Pt92/W8 wire; (3) mirror and inertial disk; (4) window for laser beam; (5) molybdenum bar; (6) tube with radiation shields; (7) ceramic and steel tubes; (8) furnace; (9) molybdenum cylindrical cup; (10) thermocouple assembly.

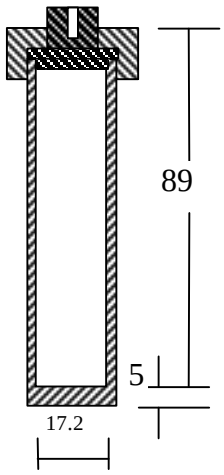

Figure2. Molybdenum cylindrical cup, with dimensions in mm.

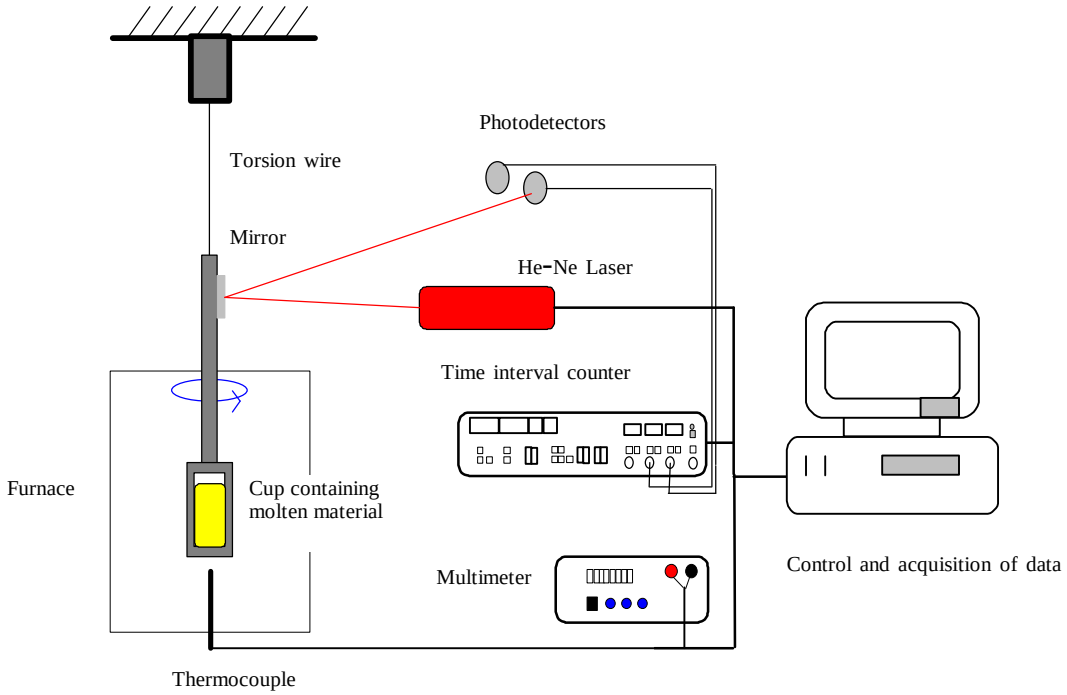

Figure 3. Schematic diagram of the measuring system