Editor's Note:

No electronic version was received for this manuscript. The document was entirely scanned, and is presented as a series of page-images. Consequently, it is not text-searchable and will print slowly.

APPARATUS FOR SIMULTANEOUS MEASUREMENT PVT AND VISCOSITY OF LIQUIDS AND GASES[1]

S.M.Rasulov[2-4], I.K.Kamilov[2], V.A.Mirscaya[2], M.M.Khamidov[3]

[1] Paper presented at the Thirteenth Symposium on Thermophysical Properties, June 22-27, 1997, Boulder, Colorado,U.S.A.

[2] Institute of Physics of Daghestan Science Center of RAS, 367007 Makhachkala,RUSSIA.

[3] Daghestan State University , Gadgieva. 43a,Makhachkala,RUSSIA.

[4] Institute of Physics of Daghestan Science Center of RAS, 367007 Makhachkala,RUSSIA

1. ABSTRACT

Experimental apparatus for simultaneous measurements PVT and viscosity of liquids and gases at temperatures 300-700 K and pressure up to 60 MPa is described . It is based on the falling body method. Main unit is tube of high pressure, serving as piezometer of constant volume and viscometer vessel where drops freely the sinker. The time of fall automatically using the signal of passage the sinker throw two inductors is measured. The pressure is fixed with the help of a differential pressure transdurcer and is measured by piston gauge with accuracy ±0.05 . Accuracy of measurement of viscosity is estimated to be 1 %. Apparatus is tested on a pure water and results , agreed with the references data.

KEY WORDS: experimental method, density, piezometer, temperature, vapor pre ssure, viscosity, volume.

2. INTRODUCTION.

The measurement of viscosity of liquids and gases at high temperatures and pressures presents doubtless interest for the various areas of engineering and technology of high pressure. As it is known for obtaining the value of dynamic viscosity from experiment ,to determine the value of density at the same parameters of state are necessary. Therefore, worth while in one experiment to combine measurement of viscosity and density at fixed temperature and pressure. More-over, each of these parameters presents scientific and practical interest. The apparatus, described in this paper, was developed by the way of the decision of this problem.

3. DESCRIPTION OF EXPERIMENTAL APPARATUS.

The experimental apparatus is capable to receive PVTρ data by the method of piezometer of constant volume and to measure viscosity of liquids and gases by the falling body method is shown on fig.1. A main part of apparatus is tube (1) from stainless steel with the inner diameter of 8.721 mm, length of 394 mm and thickness of walls of 2.7 mm, which serves as of piezometer of constant volume and autoclave for measuring of viscosity. The tube was processed on specially developed technology with the purpose of achievement of a high degree of cleanliness of an internal surface and constancy of a diameter on all length. Uniformity of the order ±2.4 μm is achieved. At one end of the tube is installed differential pressure transducer, and on other -locking device. On the tube by hot-pressing a massive copper block (4), serving for the best alignment of temperature is mounted. On the sister tube-cooper

block is mounted three-section heater (5) heights of 500mm. On ends and middle of copper block holes for the thermocouples and thermoresistors are made. Temperature was adjusted automatically by the system of regulation, one heater supports general temperature of a sister with accuracy± 0.01K and, two other monitors a zero gradient on lengthways of a tube. The accuracy of measurement of temperature is estimated to be ± 0.014 K. The sinker (6) has the form of a cylinder with the conic end and is made from the same stainless steel as a tube . The surface of the sinker is processed so that the uniformity is echoed ±2.4 μm. The diameter of a cylindrical part of the sinker is equal to 8.61 mm. In a sinker a constant magnet is built. In the upper position the sinker is kept by the electromagnet (7). At the switching off electromagnet the sinker begins freely to fall downwards. The time of fall of the sinker is automatically fixed by electronic clock. For getting necessary signal of passage of the sinker, in a middle of tube on distance 200 mm a two induction coils (8) are disposed. The signal passage of sinker through coils is used for "start" and "stop" of electronic clock .The sinker simultaneously hashes a researching liquid. The returning the sinker into a initial position is executed by turn of a system on 180 °. The pressure in the piezometer is fixed using signal of the differential pressure transducer and are measured up to 1 MPa , and higher by a piston gauge with the accuracy ± 0.05. The membrane (2) is made from stainless still of thickness of 0.1 mm and are squeezed between two flanges. The maximum backlash between a average position of a membrane and isolated output in a center of flange is equal to 0.2 mm. On a membrane and on isolated output constant voltage is moved. The switching on and off of a circuit is observed with the

help of a microampermeter. Sensitivity of a differential pressure transducer was 0.005 MPa . On the value of pressure the amendment of the barometric pressure is introduced, and the membrane and tube are at the same level. The measuring volume of the tube - piezometer by calibration on a water was determined and was equal to $23.89*10^{-3}$ m^3. The sinker volume $2.73*10^{-3}$ m^3 and a volume of the piezometer was equal to $21.1*10^{-3}$ m^3. On change of the volume of piezometer depending on pressure and the temperatures amendments were made.

All system is installed on freely rotating on 180 °-axes . For compensation leakage of heat by over axes, heater (9) is mounted on them, capacity of which is regulating depending on the indication of a differential thermocouple.

Measurements are conducted on isochor. For loading the piezometer, necessary quantity of researching liquid was taken and throw the locking device was injected into a system ,that was previously evacuated. The weight was determined with accuracy not less than ±0.5 mg. The falling body method for measurement of viscosity more often is using as relative method as because of insufficient theoretical arguments validity $\eta = A(\rho_s - \rho)\,\tau$, where ρ_s and ρ - density of the sinker and substance, τ- time fall of the sicker , and A is constant of viscometer and are defined by preliminary experiments. However, there is work (1), in which is theoretical substantiation of a method and the formula for calculation η is derived. Relation between velocity of fall , geometrical sizes of the sinker and a tube in which the sinker are falling, and viscosity of substance at

laminar flow in a ring backlash is established. The formula for calculation of viscosity has the form

$$\eta = \left(\frac{g\Delta\rho\tau\kappa_1}{2\mathrm{H}\kappa_2} - \xi\frac{\rho\mathrm{H}}{4h\,\tau\kappa_2} \right) \frac{R_0^{\,2}}{3R_0^{\,2} - R^2} \left[\left(R^2 + R^2{}_0\right) \ln\frac{R}{R_0} - \left(R^2 - R^2{}_0\right) \right]$$

where κ_1 and κ_2 - constants, connected with the geometrical sizes of the sinker, H- height of fall of the sinker, R- radius of a tube, R_0 - radius of sinker, h- height of a cylindrical part of the sinker, ξ coefficient of frontal resistance, connected with Reynolds constant and $\Delta\rho$- difference of densities of the sinker and investigated substance.

The calculated accuracy of measurement of viscosity of a liquid is far from a critical point of ±1% and near critical point ± 2-3 %.

4. MEASUREMENT.

With the purpose of checking of experimental installation measurements of viscosity and PVT - properties of a double distilled water were carried out. The measurements are conducted on isochor with density in a steam phase equal to 351.1 kg / m³. In tab.1. results of our experiments and for comparison references data on pressure and viscosity . In forth and seventh column of the table deviation of experimental date of pressure and viscosity from references in percentage are given. These deviations, basically, are stacked in calculated accuracy of measurement.

The work is supported by Russian Fond of fundanental Investigation (grant N97-02-17622; N90-02-16777α)

REFERENCES

1. S.O, Gusejnov, *Izvestija VUZov. Neft i Gaz.* 10 :(56) ,(1982).
2. M.P.Vakulovich, *Thermodinamic properties of water and steam* (Moskow-Berlin,1958). pp. 122-208
3. N.B. Vargaftic, *Spravochnic po teplofizicheskim svojstvam gazov i gidkostej*,(Nauka, Moskwa,1972) pp. 48-50

Tabl.1.Experimental values P,T and η pure water on isochor at

$V=2.48*10^{-3}$ m^3/kg.

T,^{0} C	P,MPa experi-ment	P,MPa referen-ces[2]	δ,%	η*10^7Pa*c experi-ment	η*10^7 Pa*c referen-ces[3]	δ%
72.06	0.035	0.035	0	3927	3902.	+0.6
151741	0.4938	0.4940	- 0.04	1804	1793	+0.6
187.04	1.19980	1.1976	+0.03	1415	1429	- 1
227.04	2.649	2.6485	+0.04	1184	1177	+0.6
264.91	5.076	5.078	- 0.04	1002	1012	- 1
281.54	6.574	6.570	+0.06	948	956	- 0.8
326.20	12.253	12.247	+0.05	812	805	+0.9
344.20	15.392	15.395	- 0.02	724	757	- 0.4
352.01	16.953	16.949	+0.02	691	689	+0.3
388.15	26.697	26.685	+0.04	450	447	+0.7
404.07	31.334	31.344	- 0.03	452	450	+0.4

FIGURE CAPTION

Fig.1. Schematic diagram of the experimental apparatus: 1, tube; 2, differential pressure gauge; 3, locking device; 4, copper block; 5, heaters; 6, sinker; 7,electromagnet; 8. induction coils; 9, heater.

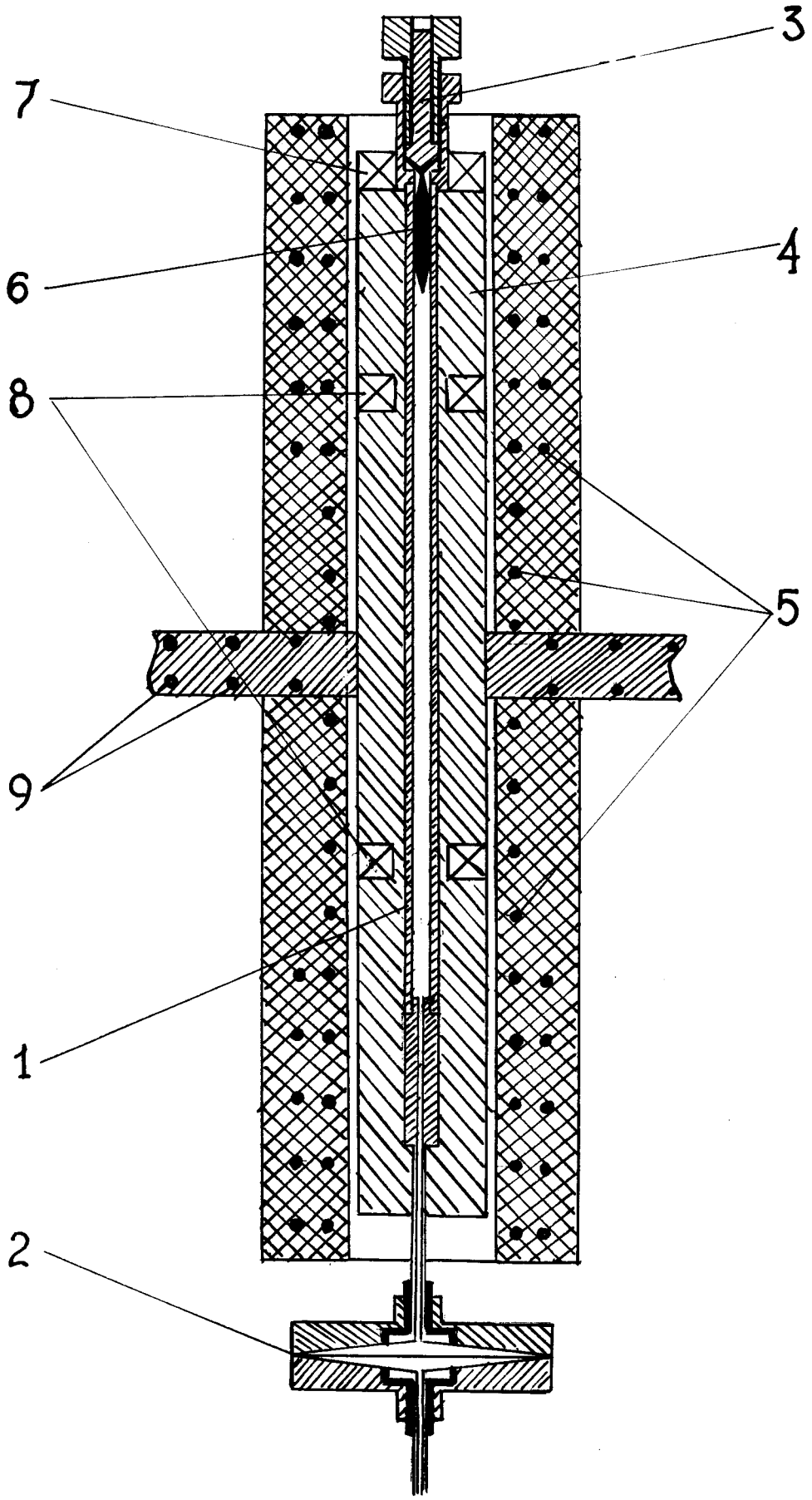
3
7
4
6
8
5
9
1
2