Effect of Polarity Modifiers on the Solubility of Ephedrine Derivatives in Supercritical CO_2

Ki-Pung Yoo[a,*], Sang Hoon Ahn[a], Young Won Chin[b], Young Hae Choi[b], and Jinwoong Kim[b]

[a] Dept. of Chem. Eng., Sogang University, C.P.O. Box 1142, Seoul, Korea

[b] College of Pharmacy, Seoul Nat'l University, Seoul 151-742, Korea

---

Abstract

The effect of polarity modifiers(methanol, ethanol, chloroform, ethyl acetate, acetone, and diethylamine) was measured on the supercritical CO_2 extraction of ephedrine derivatives from *Ephedra sinica*. It was found that the addition of 1.0 volume % diethylamine to CO_2 showed the highest enhanced extractability. The other modifiers show no significant enhancing effect. Thus, diethylamine was chosen as a target modifier and the effect of diethylamine on the solubility of three ephedrine derivatives(ephedrine, pseudo-ephedrine and methylephedrine) in CO_2, was measured at 313.15~ 353.15 K and 13~35 MPa. Also, using a recently developed equation of state by one of the present authors, the solubility of each ephedrine solute in supercritical CO_2 was modeled.

Keywords: Experimental method, supercritical carbon dioxide, modifiers, solubility, pharmaceuticals

---

1. Introduction

In oriental medicine *Ephedrae* Herba has been used for diaphoretic, anti-asthmatic, diuretic and acute nephritic edema. Alkaloids from *Ephedrae* such as ephedrae, pseudoephedrae, and methyl ephdrae are used in western pharmacy for asthma, influenza and inflammation. A degree of activity of a drug containing *Ephedrae* extract is usually

evaluated in terms of its alkaloid content[1,2].

Although CO_2 is one of the most widely investigated supercritical(SC) solvents, it is too nonpolar to extract polar substances. Recently, several methods such as adding modifiers, derivatization and microemulsion have been applied to SC-CO_2 for application to polar compounds[3-7]. Upon the present authors' preliminary work, polar ephedrines were only sparingly soluble in SC-CO_2. Thus, to alter the nonpolar nature of CO_2, several polar modifiers (methanol, ethanol, acetone, ethyl acetate and chloroform) were respectively added to CO_2 and the effect of enhancement of extraction and solubility were evaluated.

The thermodynamic modeling of solubility of bioactive substances in SC fluids is frequently very difficult to conduct due to the lack of thermophysical properties of pure state such as critical constants, vapor pressure and molar density. Thus, in the present study, an attempt was made for the correlation of the solubility of ephedrines in polarity-modified CO_2, and report some modeling results in this article.

2. Experimental

Plant Material and Standard Reagents. Aerial part of *Ephedra sinica* Stapf was obtained from the Korea Export and Import Federation of Drugs and it was dried for a day at 315.15K in an oven and powdered. Reagent grade L-ephedrine(free base), D-pseudoephedrine, and L-methylephedrine were purchased from Sigma Co.(St. Louis, MO, USA). Chemical structure of ephedrines are shown in Fig. 1. Diethylamine was obtained from Duksan Co.(Yongin, Korea) and other modifiers(methanol, ethanol, acetone, ethyl acetate and chloroform) were purchased from J.T. Baker Co.(Philisburg, NJ, USA). The purity of CO_2 was 99.9% which was purchased from Seoul Gas Co.(Seoul, Korea).

Supercritical Fluid Extraction(SFE). SFE of *Ephedra sinica* Stapf was performed using a multiport autosampling apparatus(ISCO SFX-3560, Lincoln, NE, USA). The schematic diagram of the modified apparatus is shown in Fig. 2. To inject modifier to the flow of CO_2, additional syringe pump and flow controller were additionally installed. The volume of equilibrium cell is 10 *ml*.

To adjust the volume % of modifier, the flow rates of CO_2 and modifier were maintained by 10 ±1.0 m*l*/min and 1.0±0.1 *ml*/min, respectively. For each run, 100 *mg* of *Ephedra sinica* was loaded into the cell and provided 10 min static time before start dynamic SFE. The cell condition was maintained at 353.15K and 34.0 MPa. The restrictor was kept at 415.15 K. Measurements were repeated three times for each sample. The extract was collected by a methanol cold trap and after adding 40 ㎖ of orcinol as an internal standard, the extract was evaporated. Also, MSTFA(100 ㎖) was added to the cell with N_2 stream for gas chromatographic analysis.

Solubility Measurements. The same apparatus was used to measure the solubility of reagent ephedrines in pure SC-CO_2 and diethylamine added CO_2. In principle the same experimental procedure was applied to measure the solubility, however, experimental conditions were varied in the range of temperatures and pressures at 313.15~ 353.15 K and 13~35 MPa. To reach a thermodynamic equilibrium, 25 min static time was provided. For each run, 250 *mg* of each ephedrine derivative was loaded into the cell.

Gas Chromatography. HP 5890 II gas chromatography(Hewlett Packard, Avondale, PA, USA) with FID and HP 3390 integrator was used. An Ultra-2 column (length 25m, i.d. 0.32mm, film thickness 0.25m, Hewlett Packard) was also used. Detector temperature was 555.15K and the initial oven temperature was 365.15K. The oven temperature was held for 1 min and heated by 3 K/min to 399.15K and held for 3 min

and then heated up to 555.15K at a rate of 20 K/min. Helium was used for carrier with flow rate 2.4 ml/min. The split ratio was 1:50. The mixture was reacted at 350.15K for 2 hrs and 1 ml of the sample solution was injected. The yield of each extraction for ephedrine, pseudoephedrine and methylephedrine was calculated via each standard curve. The regression equations of these curve and their correlation coefficients were calculated as $y = 0.04537x + 0.002934$ (r^2=0.9938) for ephedrine, $y = 0.03929x + 0.0009893$ (r^2= 0.9993) for pseudoephedrine and $y = 0.05803\,x + 0.002445$ (r^2=0.9949) for methylephedrine, where y is the amount of standard(mg) and x is the ratio of peak area of internal standard.

3. Thermodynamic Modeling

Pure Physical Properties Estimation. For ephedrine derivatives, almost no information of pure physical properties is reported in the literature. Thus, necessary pure physical properties were estimated based on methods presented in the Databook[8]. Estimated pure physical properties for ephedrines such as critical temperature(T_c), critical pressure(P_c), accentric factor(ω) and molar volume(V_s) are summarized in Table 1.

SCF Solubility Correlation by Lattice Equation of State. To model the solubility of an ephedrine in CO_2 with a modifier, a new lattice equation of state(EOS) proposed by on of the present authors was applied[9]. Omitting details, the final expression of EOS, for a general mixture, is given by;

$$P = \frac{1}{bV_H}\left\{\frac{z}{2}\ln\left[1+\left(\frac{q_M}{r_M}-1\right)\rho\right]-\ln(1-\rho)+\frac{z}{2}\sum_{i=1}^{c}q_i\left(\frac{\tau_{0i}}{\sum_{k=0}^{c}q_k\tau_{ki}}-1\right)\right\} \qquad (1)$$

where, $q_M = \Sigma x_i q_i$, $r_M = \Sigma x_i r_i$, $\rho_i = N_i r_i / N_r$, $\rho = \Sigma \rho_i$ and x_j is the mole fraction of

species i. We set the coordination number, z is 10 and the unit lattice cell volume, V_H equal to 9.75 cm^3mol^{-1}. If we set the subscripts i=1 and j=0, Eq. (2) becomes specific for a pure fluid.

The two molecular parameters in the EOS for pure fluids; V_1^* and ε_{11} are temperature-dependent and they related by the following empirical formulas;

$$\varepsilon_{11} / k = E_a + E_b(T - T_0) + E_c(T \ln T / T_0 + T - T_0) \qquad (2)$$

$$V_1^* = V_a + V_b(T - T_0) + V_c(T \ln T / T_0 + T - T_0) \qquad (3)$$

where the reference temperature, T_0 is 273.15K. The coefficient values in Eqs. (2) and (3) are listed in Table 2.

To calculate phase equilibrium of a mixture by the EOS, we need additional cross interaction energy, ε_{ij} between species i and j defined by;

$$\varepsilon_{ij} = (\varepsilon_{ii}\varepsilon_{jj})^{0.5}(1 - \lambda_{ij}) \qquad (4)$$

where λ_{ij} is the adjustable binary interaction energy which can be best-fitted using the experimental solubility data.

4. Results and Discussion

SFE of Ephedra sinica Stapf. In the preliminary SFE experiment, we found that ephedrine derivatives are only sparingly extractable when the pure CO_2 was used. Also, among the six modifiers(i.e., methanol, ethanol, chloroform, ethyl acetate, acetone, and diethylamine), the addition of diethylamine as the polarity-modifier to CO_2 show in particular the highest extraction yield. By an example of gas chromatograms of the SFE extracts, the effect of the modifier enhancement on the extractability of ephedrines from *Ephedra sinica* Stapf at 353.15K and 34.0 MPa was shown in Fig. 3.

Among tested modifiers, chloroform, acetone, and ethyl acetate showed no significant increase of the extractability of ephedrines. Also, ethanol and methanol showed slightly increased extraction yield. However, diethylamine was found to be the best modifier. Thus, we selected diethylamine as a target polarity modifier and conducted further solubility measurement.

Measurement and Modeling Solubility of Ephedrines.

Solubility of three ephedrines in pure supercritical CO_2 and diethylamine-added CO_2 was measured over a wide range of pressures and temperatures(at 313.15~ 353.15 K and 13~35 MPa). In Fig. 4-6, the measured solubilities of ephedrine(Fig. 4), methylephedrine(Fig. 5) and pseudoephedrine(Fig. 6) in CO_2 and in diethylamine-added CO_2 were shown. Also, the calculated result by the EOS for ephedrine/pure CO_2 systems were compared together. In general, solubility was significantly enhanced by the addition of diethylamine.

To perform phase equilibria calculation by the EOS for the ternary ephedrine(1)/CO_2(2)/diethylamine(3) system, it requires three sets of l_{ij}, namely, l_{12}, l_{13} and l_{23}. However due to the lack of information, solubility calculation was performed only for binary ephedrine(1)/CO_2(2) systems. Future work is to extend modeling solubility of ephedrines in diethylamine/CO_2 solvent.

References

[1] K. Yamasaki, K. Fujita, M. Sakamiti, K. Okada, M. Yoshida and O. Tanaka, Chem. Pharm. Bull., 22 (1974) 2889-2902.

[2] K. Sagara, T. Oshima and T. Misaki, Chem. Pharm. Bull., 31 (1983) 2359-2365.

[3] M. Moriyasu, M. Endo, R. Kanazawa, Y. Hashimoto, A. Kato and M. Mizuno, Chem. Pharm. Bull.,32 (1984) 744-747.

[4] J. Zhang, Z. Tian and Z. Lou, Planta Med., 54 (1988) 69-70.

[5] J. Cui, T. Zhou, J. Zhang, and Z. Lou, Phytochem. Anal., 2 (1991) 116-119.

[6] C.D. Bevan and P.S. Marshall, Nat. Prod. Rep., 11 (1994) 451-466.

[7] W.K. Modey, D.A. Mulholand and M.W. Raynor, Phytochem. Anal.,7 (1996) 1-15.

[8] W.J. Lyman, W.F. Reehl and D.H. Rosenblatt, Handbook of Chemical Property Estimation Methods, ACS Press, Washington, DC, 1990. Ch. 12.

[9] C.S. Lee and K.-P. Yoo, Proc. Int. Symp. on Molec. Thermo. & Molec. Sim., Hosei Univ. Tokyo, Japan, 109 (1997) 53-60.

Table 1. Estimated pure physical properties of three ephedrines

species	critical temp. T_c [K]	critical press. P_c [MPa]	accentric factor *w*	molar volume V_s[cm^3/mol]
ephedrine	784.927	3.555	0.997	104.305
pseudoephedrine	784.927	3.555	0.997	104.305
methylephedrine	785.869	3.199	0.954	118.908

Table 2. Best-fited coefficient values of the EOS volume and energy parameters given by Eq. (2) and (3)

species	E_a	E_b	E_c	V_a	V_b	V_c
carbon dioxide	85.91302	-.10298	-.36562	34.28608	0.01428	-0.01304
diethylamine	104.77658	-0.01982	-0.07008	87.96818	.00585	0.02410
ephedrine	115.57961	0.56712	10.16910	213.71447	-2.00435	-36.22756
pseudoephedrine	240.92778	-6.12315	-39.33727	48.00312	4.82125	5.60704
methylephedrine	185.77658	-2.85070	-15.24415	101.26904	4.40412	12.19494

Figure Captions

Fig. 1. Chemical structures of ephedrines

Fig. 2. Schematic diagram of modified autosampling equilibrium cell(ISCO SFX 3560)

Fig. 3. Gas chromatogram of *Ephedrine sinica* SFE extracts by pure CO_2 and modifier-added CO_2(IS: Internal standard, E: ephedrine, PE: pseudoephedrine, ME: methylephedrine)

Fig. 4. Measured and calculated(l_{12} = 0.0103) solubility of ephedrine in pure CO_2 at three isotherms.

Fig. 5. Solubility of methylephedrine in pure CO_2 and in diethylamine-added CO_2. (l_{12} = 0.0556 for the calculated solubilities in pure CO_2)

Fig. 6. Solubility of pseudoephedrine in pure CO_2 and in diethylamine-added CO_2(l_{12} = 0.02138 for the calculated solubilities in pure CO_2).

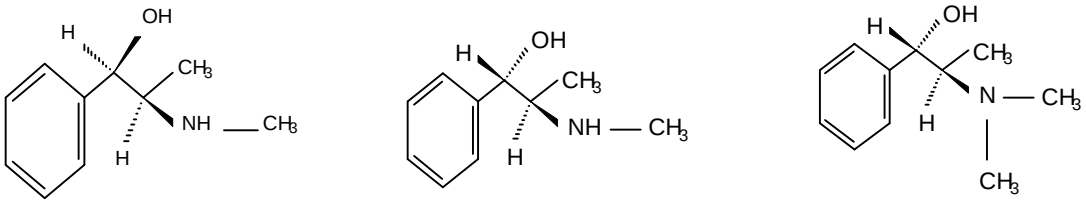

(a) ephedrine (b) pseudoephedrine (c) methylephedrine

Fig. 1. Chemical structure of ephedrine derivatives

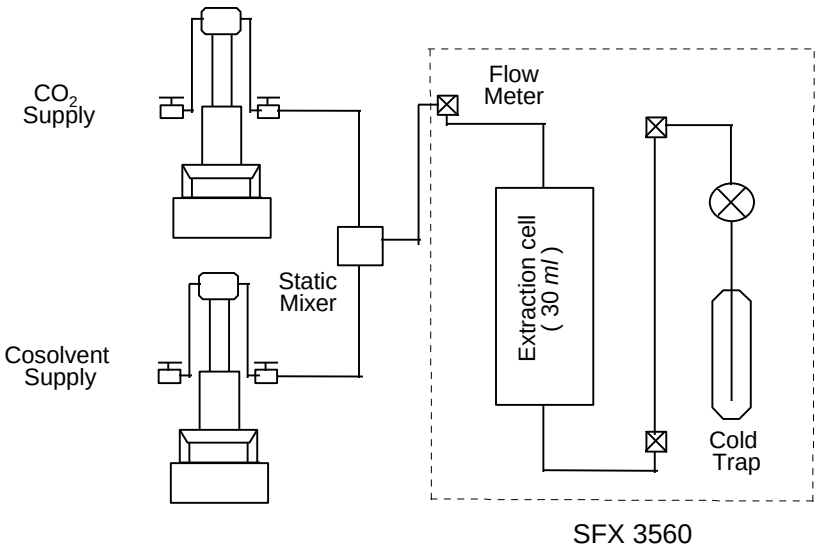

Fig. 2. Schematic diagram of improved SFX-3560

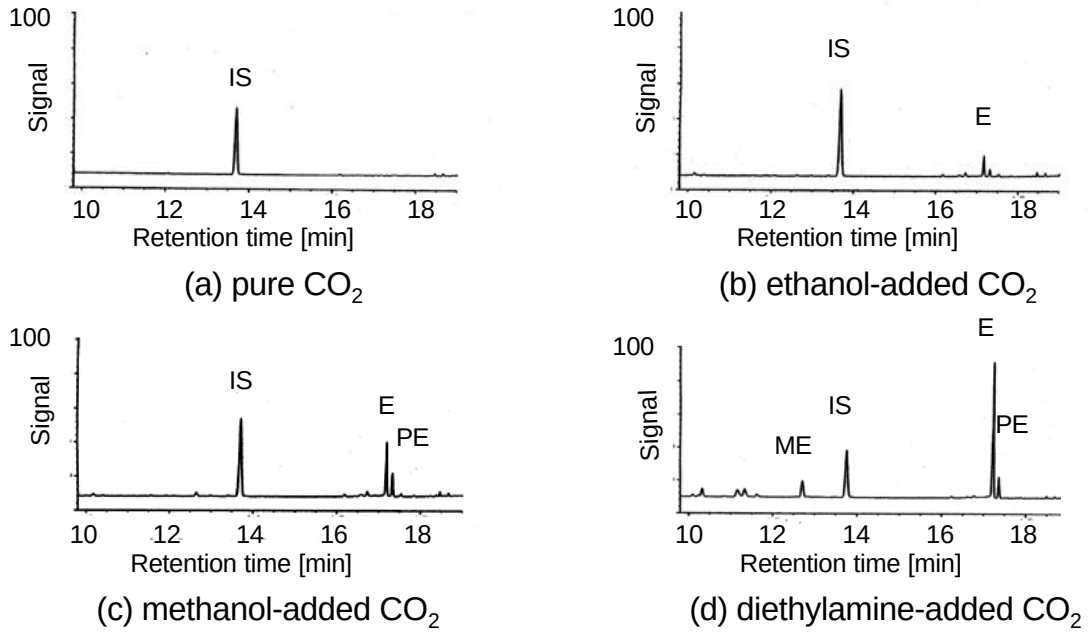

Fig. 3. Gas chromatogram of *Ephedrine sinica* SFE extracts by pure CO_2 and modifier-added CO_2(IS: Internal standard, E: ephedrine, PE: pseudoephedrine, ME: methylephedrine)

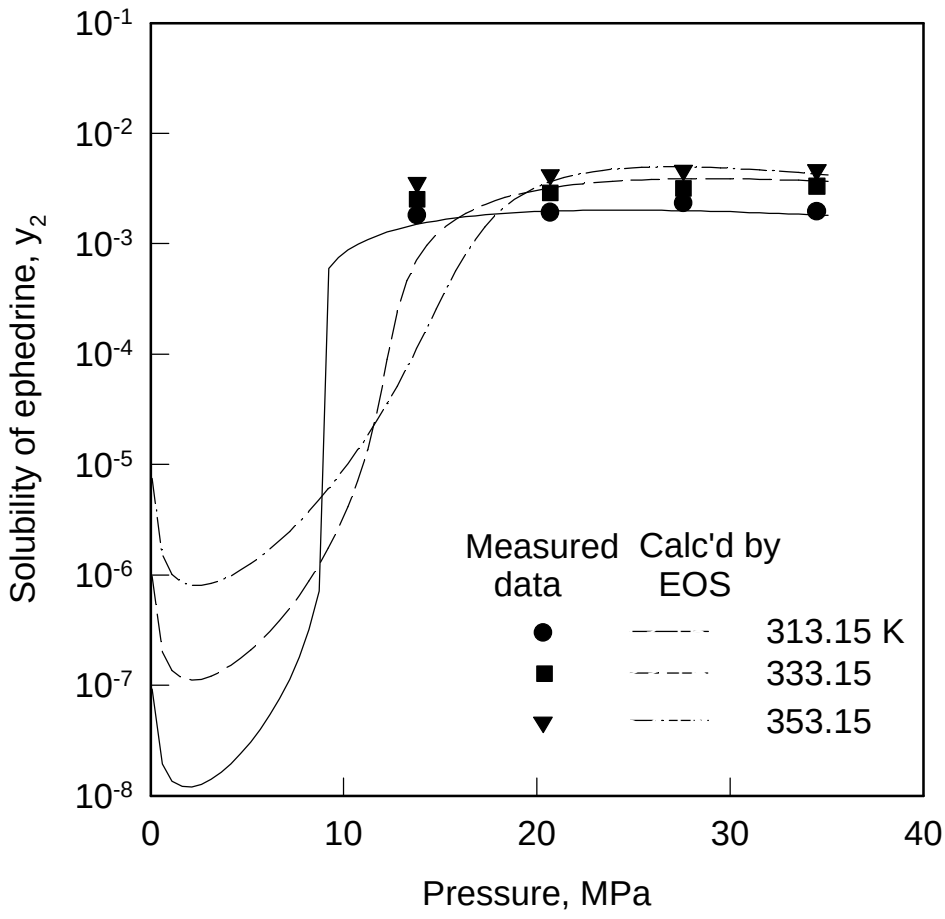

Fig. 4. Measured and calculated(l_{12} = 0.0103) solubility of ephedrine in pure CO_2 at three isotherms.

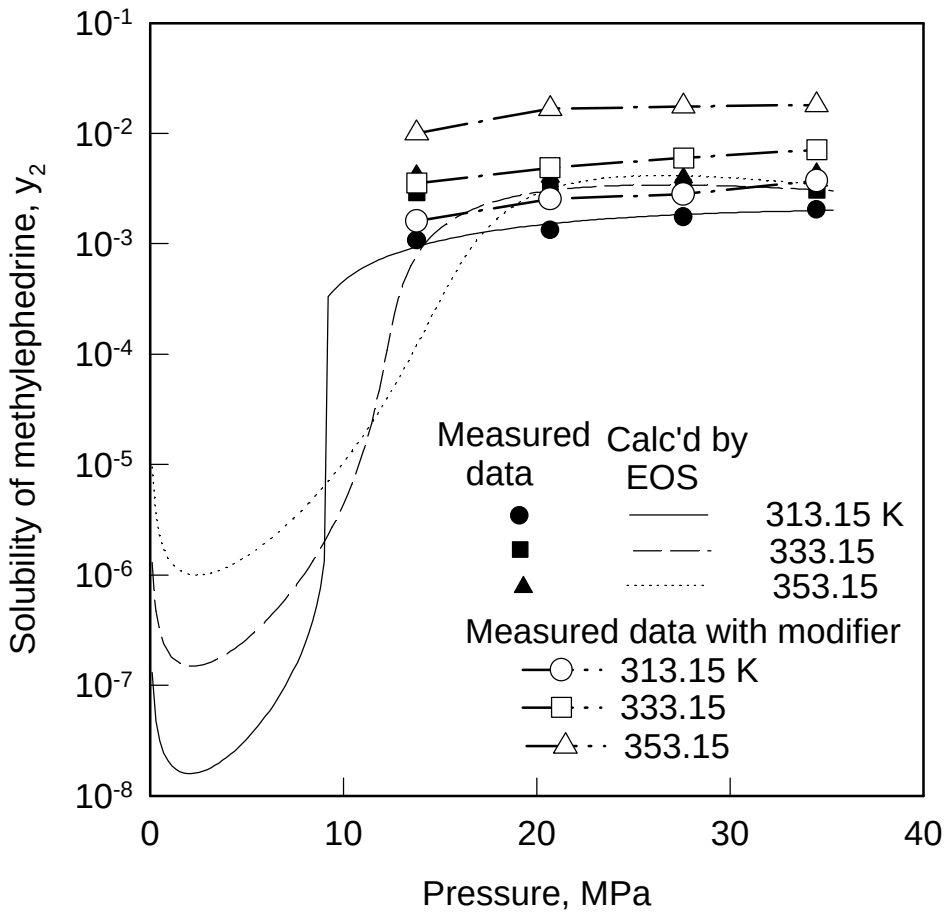

Fig. 5. Solubility of methylephedrine in pure CO_2 and in diethylamine-added CO_2.
(l_{12} = 0.0556 for the calculated solubilities in pure CO_2)

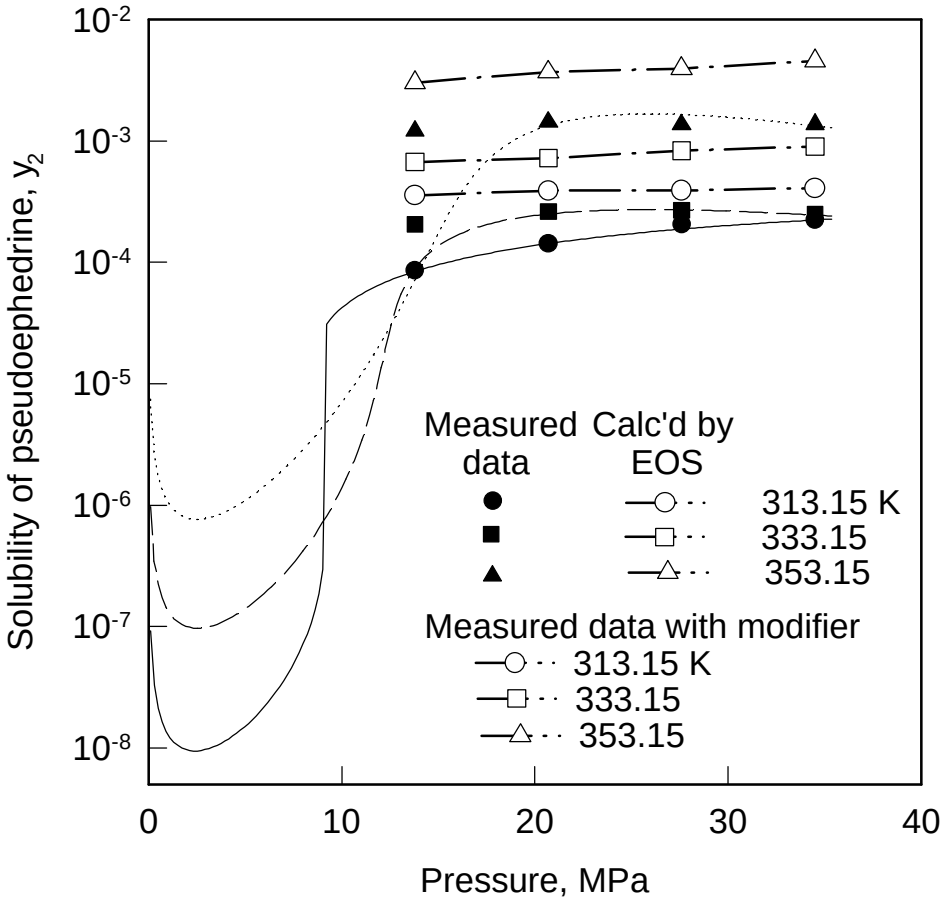

Fig. 6. Solubility of pseudoephedrine in pure CO_2 and in diethylamine-added CO_2.
(l_{12} = 0.0214 for the calculated solubilities in pure CO_2)