Subsecond Thermophysics and Equilibrium Vacancy Concentrations in Metals

Yaakov Kraftmakher

The Jack and Pearl Resnick Institute of Advanced Technology,

Department of Physics, Bar-Ilan University, Ramat-Gan 52900, Israel

ABSTRACT

Despite a significant progress in studies of point defects in metals, no unambiguous conclusion has been found about equilibrium vacancy concentrations. The objectives of the paper are as follows: (1) to recall recent results concerning equilibrium vacancy concentrations; (2) to report on further observations of the relaxation phenomenon in specific heat caused by the vacancy equilibration; (3) to show that the difference between the high-temperature enthalpies of W and Mo measured under equilibrium and in rapid-heating experiments may demonstrate the vacancy formation; (4) to propose a straightforward determination of the vacancy contributions to the enthalpy of metals; (5) to show that the vacancy contributions to the electrical resistivity of refractory metals can be seen from measurements under equilibrium; (6) to give a brief summary presenting an *opposite view* on equilibrium vacancies in metals.

KEY WORDS: enthalpy, equilibrium vacancies, high temperatures, metals, pulse heating, specific heat, subsecond thermophysics.

1. INTRODUCTION

Despite a significant progress in studies of point defects in metals, no unambiguous conclusion has been found about equilibrium vacancy concentrations. Two viewpoints exist now: (i) Defect contributions to physical properties of metals at high temperatures are small and cannot be distinguished from the effects of anharmonicity. The reasonable values of the formation enthalpies deduced from the nonlinear increase in specific heat are accidental and the deduced defect concentrations are improbably large, so that this approach is generally erroneous. This viewpoint is shared by the majority of the scientific community. (ii) In many cases, the defect contributions to specific heat are much larger than the effects of anharmonicity and can be separated without crucial errors (Fig. 1). This approach is quite adequate for studying equilibrium point defects. The equilibrium vacancy concentrations at melting points are of the order of 10^{-3} in low-melting-point metals and of the order of 10^{-2} in refractory metals. This is the *opposite viewpoint*.

Important data have appeared during the last decade. Firstly, the relaxation phenomenon in the specific heat of W and Pt caused by the vacancy equilibration has been observed [1-5]. Such measurements were proposed long ago and considered as the most reliable determination of the vacancy contributions. Secondly, new differential-dilatometry data on Ag and Cu [6] revealed vacancy concentrations three times larger than accepted during three decades. However, an order-of-magnitude discrepancy still remains between the calorimetric data and those from the differential dilatometry. An unambiguous solution of the question may be given by subsecond thermophysical measurements. To determine the vacancy contribution, the enthalpy or specific heat should be measured with so rapid temperature changes that the vacancy concentration could not follow the temperature [7].

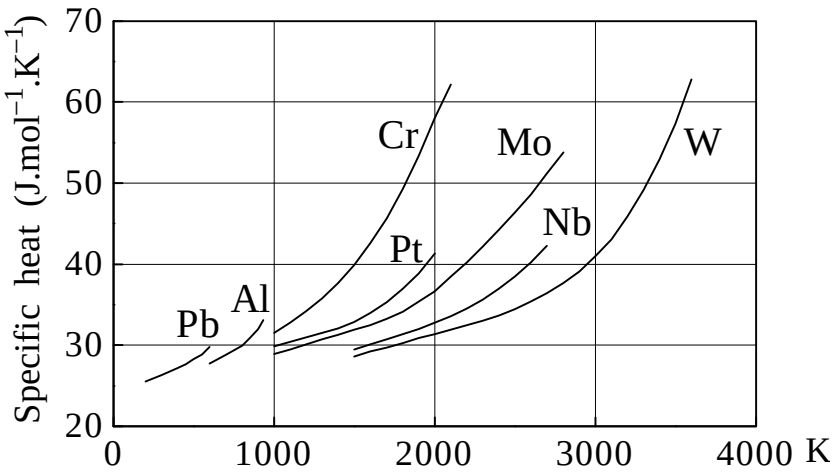

Fig. 1. Nonlinear increase in specific heat of metals. The difference between the low-melting-point metals and the refractory metals is clearly seen.

2. FURTHER OBSERVATIONS OF THE RELAXATION IN SPECIFIC HEAT

An additional possibility to detect the relaxation in specific heat is monitoring the phase of the high-frequency temperature oscillations in the sample. The equilibrium concentration of the vacancies, c_v, and their contribution to the specific heat, ΔC, are as follows:

$c_v = \exp(-G_F/k_B T)$, $\quad G_F = H_F - TS_F$, $\quad \Delta C = (NAH_F^2/k_B T^2)\exp(-H_F/k_B T)$,

where G_F is the Gibbs energy of the vacancy formation, H_F and S_F are the formation enthalpy and entropy, k_B is Boltzmann's constant, and N is Avogadro's number.

The observable relaxation depends on the equilibrium vacancy contribution to the specific heat and on $X = \omega\tau$, the product of the angular frequency of the temperature oscillations and the relaxation time [8]:

$C(X) = C + \Delta C/(1 + \mathrm{i}X)$, $\quad |C(X)|^2 = (C_0^2 + C^2X^2)/(1 + X^2)$, $\quad \tan\Delta\varphi = X\Delta C/(C_0 + CX^2)$.

Here $C(X)$ is the specific heat written in the complex form, ΔC is the relaxing part of the specific heat (the vacancy contribution), C is the specific heat when the vacancy concentration does not follow the temperature oscillations, $C_0 = C + \Delta C$ is the equilibrium

specific heat measured at low modulation frequencies when $X^2 << 1$, and $\Delta\varphi$ is the phase shift in the temperature oscillations caused by the relaxation. The temperature behavior of the ratio of the specific heats measured at the two frequencies corresponds to a gradually decrease of X at increasing temperature. At a given frequency, this ratio first increases with temperature, reaches a maximum and then falls because of the decrease in the relaxation time. Assuming a constant density of the sources and sinks for the vacancies, the temperature dependence of this ratio can be evaluated. For the calculations, one can accept $X = \exp[H_M(1/k_B T - 1/k_B T_0)]$, where H_M is the enthalpy of the vacancy migration, and the variable parameter T_0 is a temperature for which $X = 1$. Using this approach, the relaxation was observed in W and Pt (Fig. 2) but it gained no recognition. Regrettably, no attempts to repeat such measurements were reported until today.

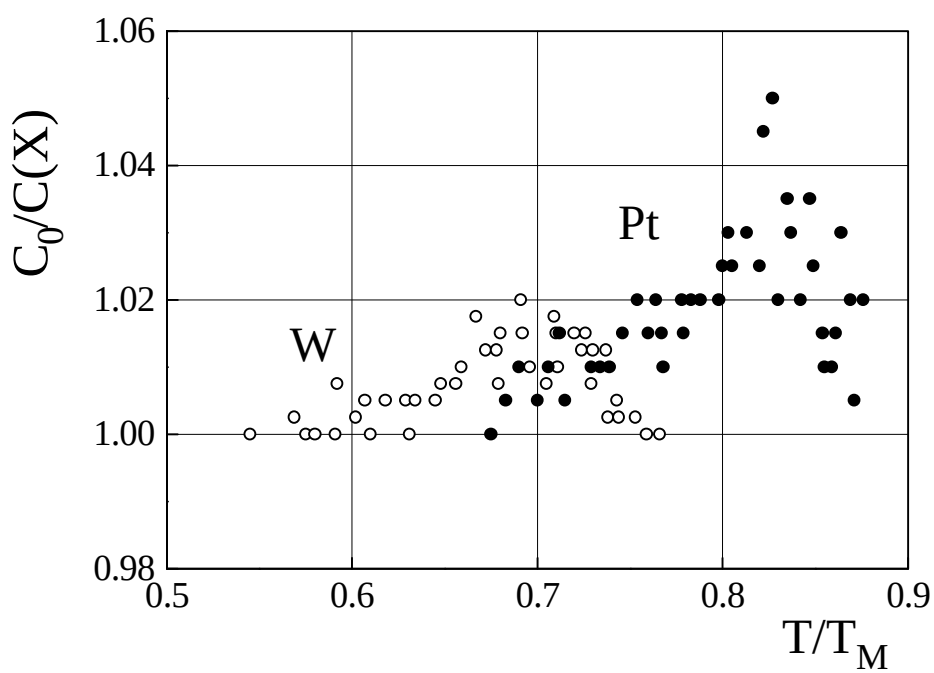

Fig. 2. Relaxation phenomenon in specific heat of W and Pt [1-5].

The setup for the observation of the relaxation is now much simpler. The wire sample is heated by a DC current with two superimposed AC components, of a high and a low

frequency (Fig. 3). The temperature oscillations in the sample of the two frequencies occur therefore simultaneously. The temperature oscillations in the sample are registered by a photodiode and measured by lock-in amplifiers. An additional lock-in detector is tuned to detect small phase changes in the high-frequency temperature oscillations expected due to the relaxation. A data-acquisition system stores the difference between the signals from the high-frequency and the low-frequency channel and the phase of the high-frequency temperature oscillations. The measurements start at temperatures where the nonlinear increase in the specific heat is negligible and no relaxation is expected. At these temperatures the difference signal is adjusted to be close to zero.

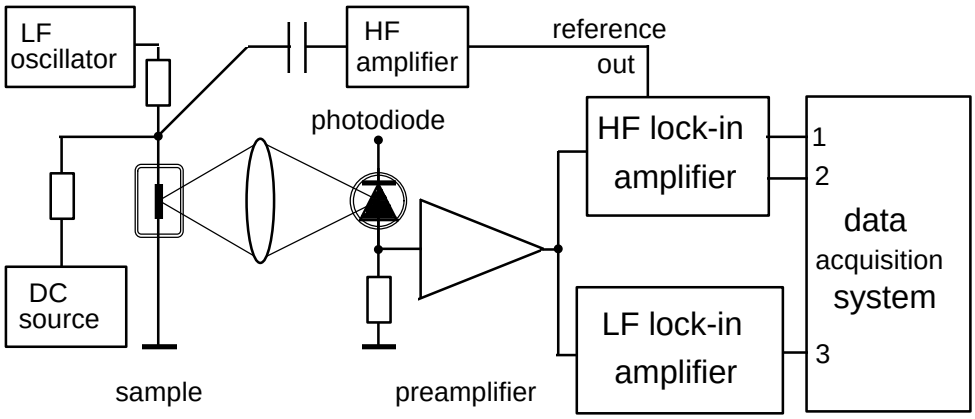

Fig. 3. New setup for observing relaxation in specific heat.

A simple approach could check the origin of the relaxation in the specific heat. If, while the relaxation is observed, to quench the sample by interrupting the heating current, the dislocation density in the sample should drastically increase. After return to the initial temperature, a certain time is necessary to anneal the sample. With a proper modulation frequency, the relaxation phenomenon should disappear immediately after the quench and gradually recover during the annealing. Such measurements are now in progress.

3. HOW TO DETERMINE THE VACANCY-RELATED ENTHALPY

Under a very rapid heating, vacancies have no time to appear. In such cases, the enthalpy of the sample at a given premelting temperature should be smaller than under moderate heating rates. To check this concept, typical data on W and Mo have been examined.

Table 1. Enthalpy of solid Mo and W at the melting points (in $kJ.mol^{-1}$).
H_1 - enthalpy after subtracting the assumed vacancy contribution,
H_2 - total enthalpy, H_3 - results of rapid-heating experiments.

	H_1	H_2	H_3	Reference	
W	112	122		Kraftmakher and Strelkov	[9]
	112	116		Cezairliyan and McClure	[10]
	109	116		Chekhovskoi	[11]
			112	Hixson and Winkler	[12]
	109	117		Righini et al	[13]
			111	Pottlacher et al	[14]
Mo	81	91		Rasor and McClelland	[15]
	84	92		Kraftmakher	[16]
	83	89		Chekhovskoi and Petrov	[17]
			85	Seydel and Fischer	[18]
	85	89		Cezairliyan	[19]
	83	90		Righini and Rosso	[20]
			87	Hixson and Winkler	[21]
			87	Pottlacher et al	[14]

The data [9-21] include equilibrium measurements of the enthalpy and specific heat and determinations of the enthalpy at the melting points with heating rates of 10^8 $K.s^{-1}$ or more that may not include the vacancy contributions. To make a quantitative comparison, the parts related to the nonlinear increase in the specific heat were separated from the

equilibrium data. We thus obtained three sets of the enthalpies at the melting points: H_1, the equilibrium enthalpies after subtracting the assumed vacancy contributions; H_2, the total equilibrium enthalpies; H_3, the results of rapid-heating measurements (Table 1). For W, the results of the rapid-heating experiments, H_3, are close to the expected H_1 values and thus strongly support the above assumption. For Mo, they lie between the two values, H_1 and H_2. Possible explanations of this could be as follows: (1) the heating rate is insufficient to completely avoid the vacancy formation; (2) the rapid heating may lead to a superheat of the samples and to an enhancement of the enthalpy at the apparent melting point; (3) the vacancy formation accounts for only a part of the nonlinear increase in the specific heat. To distinguish between these possibilities, various heating rates could be employed. Also, one can measure the enthalpy at a selected premelting temperature.

A straightforward approach was proposed [7] to determine the vacancy contributions to the enthalpy of metals. At premelting temperatures, equilibrium vacancy concentrations are set up in 10^{-4} to 10^{-2} s in low-melting-point metals and in 10^{-8} to 10^{-6} s in refractory metals. After heating the sample to a premelting temperature, the initial part of the cooling curve should depend on whether the vacancies had time to arise. If they had not, the vacancies will appear immediately after the heating. Under normal conditions, the temperature of the sample after the heating, in the time interval of interest, remains nearly constant. The heat absorbed by the vacancy formation should be available from the drop in the temperature of the sample immediately after the heating.

If the heating is not sufficiently fast, then the phenomenon could be studied under gradually increasing the upper temperature of the sample. The drop in the temperature should first to increase with the upper temperature, reach a maximum and then fall because of the decrease in the relaxation time. The vacancy formation might be also seen from the volume of the sample because the drop in the temperature of the sample should be accompanied by an increase in its volume. Such unusual behavior would be the best confirmation of the origin of the phenomenon. The same approach is probably suitable for determinations of vacancy contributions to the electrical resistivity.

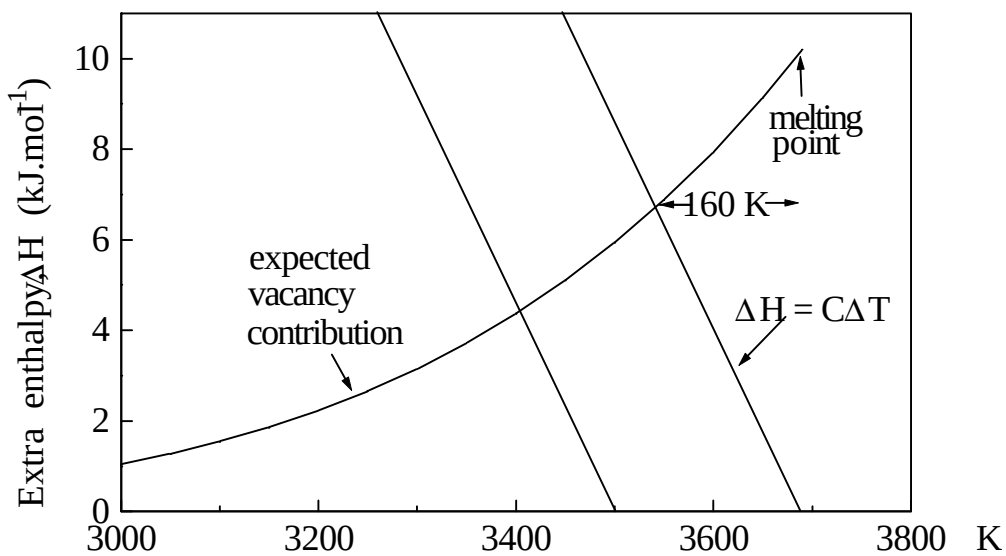

Fig. 4. Calculation of the temperature drop caused by vacancy formation after a rapid heating of tungsten sample to a premelting temperature.

To evaluate the expected temperature drop, ΔT, the vacancy concentration should be calculated at the final temperature after the equilibration. The total enthalpy of the vacancy formation is $\Delta H = H_F \exp(-G_F/k_B T)$. The heat balance requirement is $C\Delta T = \Delta H$, where C is the specific heat not including the vacancy contribution ($C \cong 40$ J.mol^{-1}.K^{-1}). From the graph (Fig. 4), the temperature drop due to the vacancy formation can be evaluated for any temperature achieved after the rapid heating. For W, the temperature drop after heating the sample to the melting point (3690 K) amounts to about 160 K. It reduces to 105 K when the sample is heated to 3500 K and to 50 K after heating to 3200 K. For Mo, the situation is similar. Hence, the expected phenomenon should be obvious if the equilibrium vacancy concentrations are of the order of 10^{-2} but it will not be seen if they are two orders of magnitude smaller. From the measurements, the temperature dependence of the vacancy contribution to the enthalpy could be evaluated.

The rapid-heating experiment to be made is similar to those reported earlier. Owing to the proposed approach, the setup may be even simpler. Now there is no need to measure the

heating current and the voltage drop across the sample. All what one needs is to bring rapidly, within 10^{-8} or 10^{-7} s, the sample to a premelting temperature and to observe the initial part of the cooling curve. An important point is to completely terminate the heating at the selected premelting temperature. Any uncontrollable heating will cause difficulties in the determination of the enthalpy related to the vacancy formation. The proposed experiment seems to be the most straightforward one that could be performed to determine the equilibrium vacancy concentrations in metals.

4. SUMMARY

From the *opposite viewpoint*, the situation can be summarized as follows [22].

(1) The nonlinear increase in the specific heat of metals, which is especially strong in the refractory metals, can be explained by the vacancy formation in the crystal lattice. However, the high vacancy concentrations found in these metals contradict the low extra resistivities and results of microscopic observations of quenched samples.

(2) Vacancy concentrations deduced from the nonlinear increase in the thermal expansivity are close to or somewhat smaller than those from the nonlinear increase in the specific heat. The vacancy formation partially involves internal sources in the samples, so that the vacancies may appear without an increase in the outer volume of the sample.

(3) The differential dilatometry has not yet been applied to metals with melting points higher than that of copper, and such measurements are very desirable. Data on the lattice parameter of refractory metals, together with bulk expansion data now available, rather support high vacancy concentrations (Fig. 5).

(4) Theoretical calculations of the anharmonicity show mainly linear contributions to the specific heat and thermal expansivity. It seems very unlikely that the nonlinear anharmonicity contribution might be much larger than the linear term.

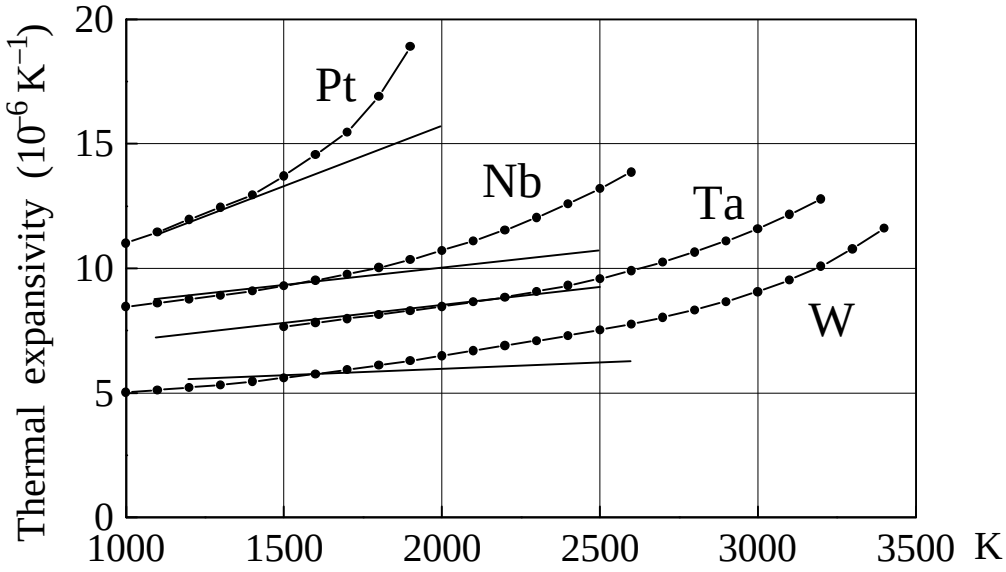

Fig. 5. Thermal expansivity of some high-melting-point metals:
● - bulk expansion, —— X-ray data [23, 24].

(5) Very different defect contributions to the electrical resistivity were obtained in equilibrium and quenching experiments. The only two exceptions are Al and Pt. Still more important, the defect concentrations in these metals estimated from the extra resistivity are consistent with the calorimetric data. Among the refractory metals, quenching experiments were successful only in Mo and W. In equilibrium measurements, the defect contributions become visible after introducing corrections for the thermal expansion (Fig. 6). However, with the commonly accepted values of the vacancy-induced resistivity, the calculated concentrations remain much smaller than those from the calorimetric data.

(6) The positron-annihilation technique is regarded as the best tool to determine the vacancy-formation enthalpies. However, it does not provide the vacancy concentrations.

(7) The relaxation phenomenon in the specific heat observed in W and Pt is consistent with the vacancy origin of the nonlinear increase in the specific heat. Regretfully, no attempts to repeat such measurements were reported.

(8) High defect concentrations in the refractory metals do not contradict the self-diffusion data. Curvatures in the Arrhenius plots for self-diffusion can be explained by the two-defect model or by a temperature dependence of the enthalpies of vacancy formation and migration. In both cases, high formation entropies at high temperatures are supported.

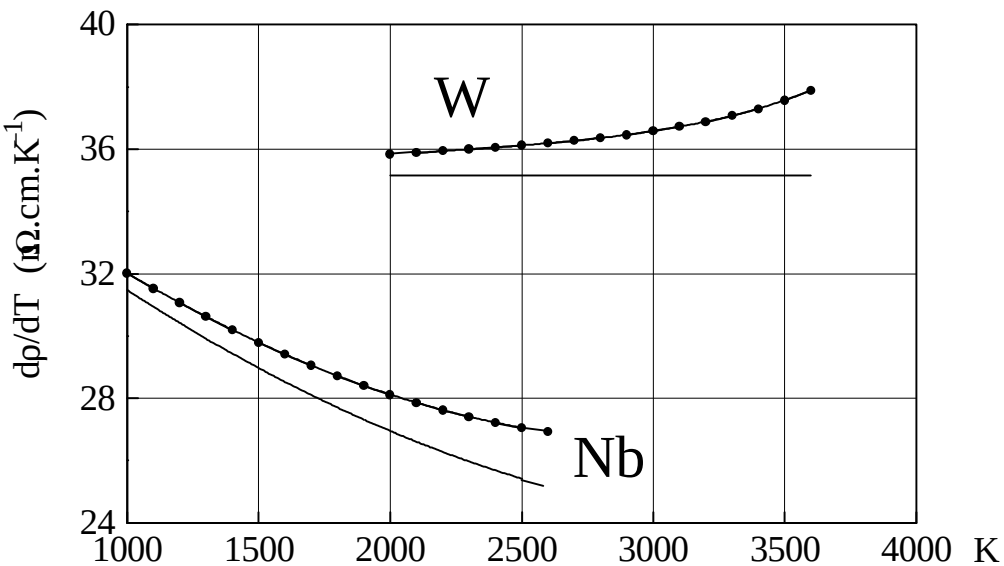

Fig. 6. Temperature derivative of the resistivity of W and Nb: fits [10, 25] based on room-temperature dimensions of the samples (–––) and corrected values (●).

(9) The subsecond thermophysical measurements provide a unique chance for a straightforward determination of the equilibrium vacancy concentrations. They include observations of the equilibration under high-frequency temperature modulation and of the vacancy formation after a very rapid heating of the sample to a premelting temperature.

ACKNOWLEDGMENTS

The author gratefully acknowledges the financial support by the Ministry of Science and Technology of Israel and the Dr. Irving and Cherna Moskowitz Program for the Absorption of Scientists.

REFERENCES

[1] Y.Kraftmakher, *Sov. Phys. Solid State* **27**:141 (1985).

[2] Y.Kraftmakher, *Phys. Lett. A* **149**:284 (1990).

[3] Y.Kraftmakher, *High Temp. - High Press.* **24**:145 (1992).

[4] Y.Kraftmakher, *High Temp. - High Press.* **26**:497 (1994).

[5] Y.Kraftmakher, *Int. J. Thermophys*. **15**:983 (1994).

[6] Th.Hehenkamp, *J. Phys. Chem. Solids* **55**:907 (1994).

[7] Y.Kraftmakher, *Int. J. Thermophys*. **17**:1137 (1996).

[8] J.Van den Sype, *Phys. Stat. Solidi* **39**:659 (1970).

[9] Y.A.Kraftmakher and P.G.Strelkov, *Sov. Phys. Solid State* **4**:1662 (1962).

[10] A.Cezairliyan and J.L.McClure, *J. Res. Nat. Bur. Stand. A* **75**:283 (1971).

[11] V.Y.Chekhovskoi, *High Temperature* **18**:888 (1980).

[12] R.S.Hixson and M.A.Winkler, *Int. J. Thermophys*. **11**:709 (1990).

[13] F.Righini, J.Spišiak, G.C.Bussolino and A.Rosso, *High Temp. - High Press*. **25**:193 (1993).

[14] G.Pottlacher, E.Kaschnitz and H.Jäger, *J. Non-Crystalline Solids* **156-158**:374 (1993).

[15] N.S.Rasor and J.D.McClelland, *J. Phys. Chem. Solids* **15**:17 (1960).

[16] Y.A.Kraftmakher, *Sov. Phys. Solid State* **6**:396 (1964).

[17] V.Y.Chekhovskoi and V.A.Petrov, *Sov. Phys. Solid State* **12**:2473 (1970).

[18] U.Seydel and U.Fischer, *J. Phys. F: Metal Phys*. **8**:1397 (1978).

[19] A.Cezairliyan, *Int. J. Thermophys*. **4**:159 (1983).

[20] F.Righini and A.Rosso, *Int. J. Thermophys*. **4**:173 (1983).

[21] R.S.Hixson and M.A.Winkler, *Int. J. Thermophys.* **13**:477 (1992).

[22] Y.Kraftmakher, *Phil. Mag. A* **74**:811 (1996).

[23] J.W.Edwards, R.Speiser and H.L.Johnson, *J. Appl. Phys*. **22**:424 (1951).

[24] Y.Waseda, K.Hirata and M.Ohtani, *High Temp. - High Press*. **7**:221 (1975).

[25] F.Righini, R.B.Roberts and A.Rosso, *Int. J. Thermophys*. **6**:681 (1985).