Measurements of *PVTx* Properties

for Binary Mixtures of HFC-32(CH_2F_2) and HFC-134a(CH_2FCF_3)[1]

K. Oguchi,[2,4] K. Amano,[3] T. Namiki,[2] and N. Umezawa[2]

[1] Paper presented at the Thirteenth Symposiumu on Thermophysical Properties, June 22-27, 1997, Boulder, Colorado, U.S.A.

[2] Department of Mechanical Engineering, Kanagawa Institute of Technology, 1030 Shimo-Ogino, Atsugi, Kanagawa, Japan.

[3] Onishi Netsugaku Co., Ltd., 1-1, Kanda Ogawa-cho, Chiyoda-ku, Tokyo, Japan.

[4] To whom correspondence should be addressed.

ABSTRACT

The binary or ternary mixtures of the hydrofluorocarbons (HFCs) are expected to be alternative refrigerants to HCFC-22 ($CHClF_2$). In these refrigerants, binary mixtures of HFC-32 (CH_2F_2) and HFC-134a (CH_2F-CF_3) will be the most possible alternatives to HCFC-22. In this point of view, the experimental study of pressure-volume-temperature-composition (*PVTx*) properties for binary mixtures of HFC-32 and HFC-134a has been conducted in the range of temperatures from 243 to 473 K, pressures up to 16.7 MPa, densities from 9.5 to 1065 kg/m^3, and compositions from 39 to 89 mol % with uncertainties of 8 mK, 1.7 kPa, 0.04 %, and 0.1 mol %, respectively. A constant volume method has been used for the present measurements either with a spherical vessel of approximately 270 cm^3 in its inner volume, or with a cylindrical vessel of approximately 138 cm^3 in its inner volume. The present data were compared with the available equation of state for this substance.

KEY WORDS: alternative refrigerants, experimental data, HFC-32, HFC-134a, mixture, *PVTx* properties, vapour pressure.

1. INTRODUCTION

In the refrigerator using a binary mixture system, there exist certain distributions of their compositions by means of the effect of vapour-liquid equilibrium conditions under different temperatures and pressures. Especially, the considerable composition changes apparently exist between the inlet and outlet of the evaporator, condenser, and expansion valve. From such reason, precise thermophysical properties are expected not only for a single composition, but also for a wide range of compositions of binary mixtures. In the present study, for the binary mixtures of HFC-32 (CH_2F_2) and HFC-134a (CH_2F-CF_3) expected to be the alternative refrigerant to HCFC-22 ($CHClF_2$), the experimental study of pressure-volume-temperature-composition (*PVTx*) properties and vapour pressures has been conducted in the range of compositions from 39 to 89 mol %.

2. SURVEY OF PREVIOUS EXPERIMENTAL STUDIES

2.1. Vapour Liquid Equilibria

The available experimental studies of vapour-liquid equilibria for binary mixtures of HFC-32 and HFC-134a cover the temperature range 203-369 K, and pressure range up to 5.4 MPa. Fujiwara et al.[1,2] measured nine data points in the range of pressures from 0.4 to 2.6 MPa and compositions from 20 to 90 mol% at 273 and 323 K. Higashi[3] also measured 12 data points in the range of temperatures from 283 to 313 K, and pressures from 0.6 to 1.9 MPa. Nagel et al.[4] obtained experimentally 50 data points in the range of temperatures from 203 to 369 K, and pressures from 0.01 to 5.4 MPa. Weber et al.[5] also obtained 33 data points in the range of temperatures from 260 to 300 K, and pressures from 0.2 to 1.8 MPa.

2.2. *PVTx* Properties

Experimental studies of *PVTx* properties for binary mixtures of HFC-32 and HFC-134a have been conducted in the range of temperatures from 228 to 440 K, pressures from 0.2 to 10.1 MPa, densities from 7 to 1300 kgm^{-3}, and compositions from 33 to 89 mol%. Fukushima et al.[6] measured 128 data points in the range of temperatures from 323 to 424 K, pressures from 1.8 to 10.1 MPa, densities from 71 to 795 kgm^{-3}, and composition of 46 mol%. Sato et al.[7] also

measured 260 data points in the range of temperatures from 320 to 440 K, pressures from 1.5 to 6.2 MPa, densities from 61 to 183 kgm^{-3}, and compositions from 33 to 89 mol%. Weber et al.[8] obtained experimentally 17 data points in the range of temperatures from 228 to 373 K, pressures from 0.3 to 4.3 MPa, densities from 7 to 169 kgm^{-3}, and composition of 50 mol%. Widiatmo et al.[9] also obtained 22 data points in the range of temperatures from 280 to 330 K, pressures from 1.3 to 3.0 MPa, densities from 993 to 1214 kgm^{-3}, and composition of 40 mol%. Iwata et al.[10] studied experimentally 97 data points of *PVTx* properties in the range of temperatures from 263 to 393 K, pressures from 0.2 to 1.3 MPa, densities from 200 to 1300 kgm^{-3}, and compositions from 33 to 75 mol%.

3. EXPERIMENTAL METHOD

By means of the constant-volume method as described in the literature[11,12], two kinds of vessels were used for the present measurements such as a spherical vessel of approximately 270 cm^3 in its inner volume, and a cylindrical vessel of approximately 138 cm^3 in its inner volume as shown in Fig. 1. Normally, the density and composition distributions apparently exist in the vessel by the gravity force effect. For eliminating the effect of these double distributions on the *PVTx* properties, especially near the critical point, the low height vessel should be taken into consideration for the mixture property measurements, and the new cylindrical vessel as shown in Fig. 1 was utilized for the present measurements. The uncertainties of temperature and pressure measurements are estimated to be better than 8 mK, and 1.7 MPa, respectively. The uncertainty of density measurements is better than 0.007 % except data of 39 mol% mixture along 9.5 kgm^{-3} isochore, where its uncertainty is estimated to be 0.04 %. Also the uncertainty of composition measurements is better than 0.007 % except data of 39 mol% mixture along 9.5 kgm^{-3} isochore, where its uncertainty is estimated to be 0.1 %. The purity of the sample of either HFC-32 or HFC-134a is 99.99 mass% furnished by Mitsui-du Pont Fluorochemical Co. Ltd.

4. EXPERIMENTAL RESULTS

4.1. Vapour Pressure

Measurements of 38 data points of vapour pressure for binary mixtures of HFC-32 and HFC-134a have been conducted for different compositions from 39 to 89 mol% of HFC-32 in the range of temperatures from 243 to 361 K, and pressures from 0.17 to 4.3 MPa, as shown in Table I.

4.2. *PVTx* Properties

Measurements of *PVTx* properties of binary mixtures of HFC-32 and HFC-134a were made for compositions from 39 to 89 mol% in the range of temperatures from 310 to 473 K, pressures from 0.29 to 16.7 MPa, and densities from 9.5 to 1062 kgm^{-3}, as shown in Table II.

5. DISCUSSION

The deviations of measured densities from the equation of state proposed by Piao et al.[13] are shown in Fig. 2 to 5. The present work was focused to the region where the measured data are scarce, and most of data shown in Table II could not be compared with available experimental data directly except near the 39 mol% composition as shown in Fig. 2 and 3.

6. CONCLUSION

The experimental data of *PVTx* properties and vapour pressures for binary mixtures of HFC-32 and HFC-134a have been obtained with the use of a constant volume apparatus for compositions from 39 to 89 mol% of HFC-32 in the range of temperatures from 243 to 473 K, pressures from 0.17 to 16.7 MPa, and densities from 9.5 to 1062 kgm^{-3}. For correlating the equation of state for this mixture, more precise experimental data should be measured in the wide range of densities and compositions.

ACKNOWLEDGMENTS

The authors are greatly indebted to the Mitsui-du Pont Fluorochemicals Co., Ltd., Tokyo, for furnishing and analyzing the samples of HFC-32 and HFC-134a. Messrs. Y.Kuwabara, H.Saito, D.Suzuki, H.Kobayashi, N.Takahashi, M.Oyakawa, S.Okuzono, and K.Urushihata are gratefully acknowledged for their assistance of the present measurements.

REFERENCES

1. K.Fujiwara, H.Momota, and M.Noguchi, *Proc. of the 13th Japan Symp. on Thermophys. Prop.* (1992), p.61.

2. K.Fujiwara, A.Sato, and S.Ide, *Proc. of the 15th Japan Symp. on Thermophys. Prop.* (1994), p.1.

3. Y.Higashi, *Int. J. Thermophys.* **16**:1175 (1995).

4. M.Nagel and K.Bier, *Int. J. Refrig.* **18**:534 (1995).

5. L.A.Weber and A.M.Silva, *Int. J. Thermophys.* **17**:883 (1996).

6. M.Fukushima, K.Machidori, S.Kumano, and S.Ohtoshi, *Proc. of the 14th Japan Symp. on Thermophys. Prop.*,(1993),p.275.

7. T.Sato, H.Kiyoura, H.Sato, and K.Watanabe, *J.Chem.Eng.Data* **39**:855(1994).

8. L.A.Weber, and D.R.Defibaugh, *Proc. of the 12th Symp. on Thermophys. Prop.*, Boulder,1994.

9. J.V.Widiatmo, H.Sato, and K.Watanabe, *Proc. of the 13th Japan Symp. on Thermophys. Prop.*, (1992),p.37.

10. I.Iwata, C.-C.Piao, and M.Noguchi, *Proc. of the 29th Japanese Joint Conf. on Air-cond. and Refrig.*, (1995), p.37.

11. K.Oguchi, M.Yamagishi, and A.Murano, *Fluid Phase Equilibria* **80**:131(1992).

12. K.Oguchi, A.Murano, K.Omata, and N.Yada, *Int. J. Thermophys.* **17**:55(1996).

13. C.-C.Piao, I.Iwata, M.Noguchi, and K.Hokotani, *Proc. of the 1996 JAR Annual Conf.*, (1996), p.129(in Japanese).

Table I. Expermental Results of Vapour Pressure

for Binary Mixtures of HFC-32 and HFC-134a

mol fraction of HFC-32	Temp. (K)	Pres. (MPa)	Dens. (kgm^{-3})
0.3917	293.150	0.9032	491.57
0.3917	303.150	1.1871	491.34
0.3917	313.150	1.5315	491.11
0.3917	333.150	2.4392	490.64
0.3917	353.150	3.6954	490.15
0.3917	360.150	4.2387	489.98
0.3917	361.151	4.3215	489.95
0.3939	273.150	0.4778	167.12
0.3939	283.150	0.6459	167.04
0.3939	293.150	0.8761	166.96
0.3939	303.150	1.1475	166.89
0.3939	313.150	1.4751	166.81
0.3939	333.150	2.3247	166.65
0.3939	353.150	3.3784	166.48
0.3939	354.150	3.4471	166.48
0.3951	308.150	1.3945	994.74
0.3951	313.150	1.5511	994.51
0.3951	323.150	1.9740	994.03
0.3951	328.150	2.2155	993.79
0.3951	329.150	2.2762	993.75
0.3952	243.157	0.1735	1065.84

Table I. (Continued)

mol fraction of HFC-32	Temp. (K)	Pres. (MPa)	Dens. (kgm^{-3})
0.3952	260.000	0.3276	1065.06
0.3952	270.001	0.4609	1064.59
0.3952	280.000	0.6331	1064.11
0.3952	290.001	0.8512	1063.62
0.3952	310.000	1.4537	1062.63
0.4029	323.150	1.9709	969.87
0.4029	333.150	2.4739	969.40
0.6622	310.000	1.7818	428.34
0.6622	330.000	2.8374	427.93
0.6622	350.000	4.3022	427.50
0.7466	310.000	1.9068	424.57
0.7466	330.000	3.0345	424.15
0.8547	310.000	2.0663	427.32
0.8547	330.000	3.2940	426.91
0.8547	350.001	5.0152	426.48
0.8869	310.000	2.1180	424.17
0.8869	330.000	3.3769	423.76

Table II. Expermental Results of *PVTx* Properties

for Binary Mixtures of HFC-32 and HFC-134a

mol fraction of HFC-32	Temp. (K)	Pres. (MPa)	Dens. (kgm^{-3})
0.3917	370.150	5.1383	489.73
0.3917	371.150	5.2346	489.70
0.3917	383.150	6.4063	489.40
0.3917	393.150	7.3926	489.14
0.3917	403.150	8.3857	488.89
0.3917	413.151	9.3806	488.63
0.3917	423.151	10.3756	488.36
0.3917	433.150	11.3715	488.10
0.3917	443.150	12.3663	487.84
0.3917	453.150	13.3594	487.57
0.3917	463.150	14.3495	487.30
0.3917	473.150	15.3379	487.03
0.3939	364.150	3.6870	166.39
0.3939	383.150	4.1919	166.24
0.3939	403.150	4.6997	166.07
0.3939	423.151	5.1899	165.90
0.3939	443.150	5.6664	165.72
0.3939	473.150	6.3629	165.46
0.3952	320.000	4.3785	1062.05
0.3952	330.000	9.5550	1061.40
0.3952	335.000	12.1525	1061.07

Table II. (Continued)

mol fraction of HFC-32	Temp. (K)	Pres. (MPa)	Dens. (kgm^{-3})
0.3952	340.000	14.7419	1060.75
0.3952	343.150	16.3811	1060.54
0.3971	310.000	0.2857	9.55
0.3971	320.000	0.2976	9.55
0.3971	330.000	0.3078	9.54
0.3971	340.001	0.3175	9.54
0.3971	350.000	0.3276	9.53
0.3971	360.000	0.3376	9.53
0.3971	370.001	0.3486	9.52
0.3971	380.001	0.3570	9.52
0.3971	390.001	0.3672	9.51
0.3971	400.000	0.3770	9.51
0.3971	410.001	0.3873	9.50
0.3971	420.001	0.3978	9.50
0.3971	430.001	0.4071	9.49
0.3971	440.001	0.4169	9.49
0.3971	450.001	0.4268	9.48
0.3971	460.000	0.4364	9.48
0.3971	470.000	0.4463	9.48
0.6622	370.000	6.2110	427.07
0.6622	390.000	8.1752	426.62
0.6622	410.000	10.1372	426.16

Table II. (Continued)

mol fraction of HFC-32	Temp. (K)	Pres. (MPa)	Dens. (kgm^{-3})
0.6622	430.000	12.0831	425.70
0.6622	450.000	14.0204	425.26
0.7466	350.000	4.6045	423.73
0.7466	370.001	6.6292	423.29
0.7466	390.001	8.7029	422.84
0.7466	410.000	10.7775	422.39
0.7466	430.001	12.8469	421.93
0.7466	450.000	14.9053	421.46
0.8547	370.001	7.2292	426.04
0.8547	390.000	9.4965	425.59
0.8547	410.001	11.7727	425.13
0.8547	430.001	14.0399	424.67
0.8869	350.000	5.1481	423.33
0.8869	370.000	7.4094	422.89
0.8869	390.001	9.7197	422.41
0.8869	410.001	12.0354	421.98
0.8869	430.001	14.3509	421.52
0.8869	450.001	16.6536	421.05

FIGURE CAPTIONS

Fig. 1. New Cylindrical Vessel for Mixture Property Measurement

Fig. 2. Deviation of Measured Densities for 39 mol% Composition from Equation of State by Piao et al.

Fig. 3. Deviation of Measured Densities near 39 mol% Composition and Densities of 160 kgm^{-3} from Equation of State by Piao et al.

Fig. 4. Deviation of Measured Densities near 75 mol% Composition and for Different Densities from Equation of State by Piao et al.

Fig. 5. Deviation of Measured Densities for Different Compositions and near Densities of 400 kgm^{-3} from Equation of State by Piao et al.

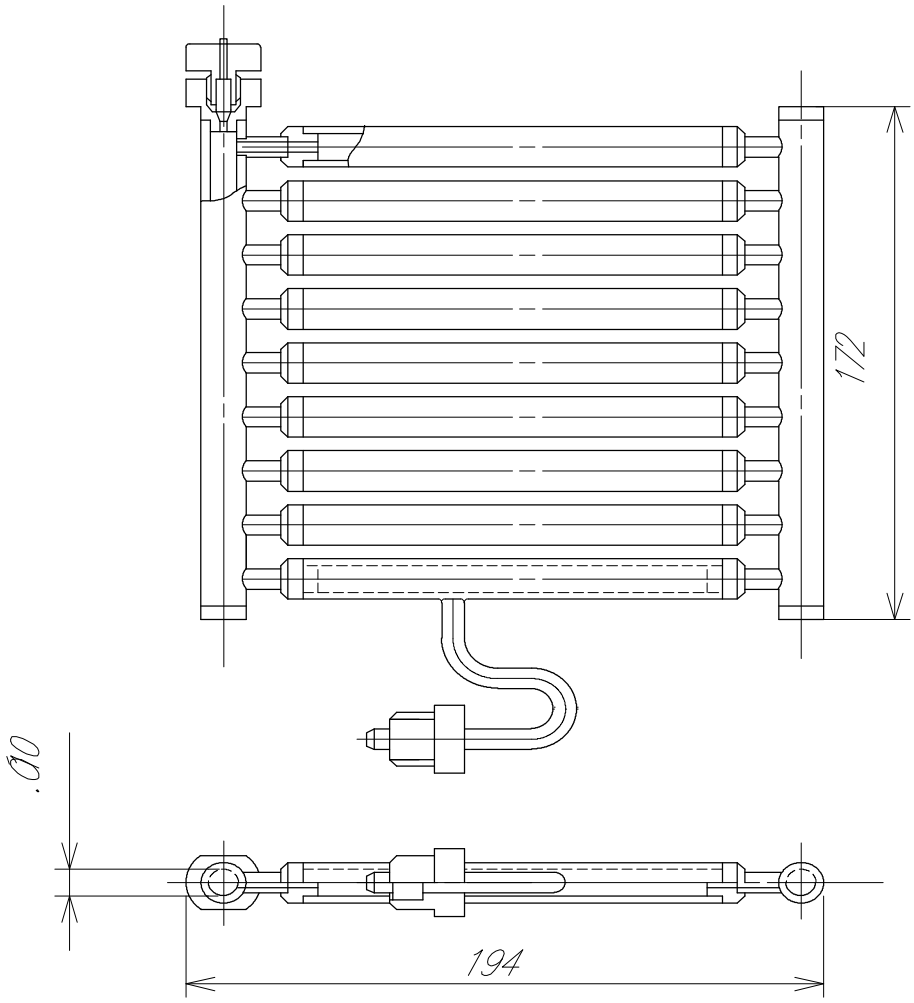

Fig. 1. (K. Oguchi et al.)

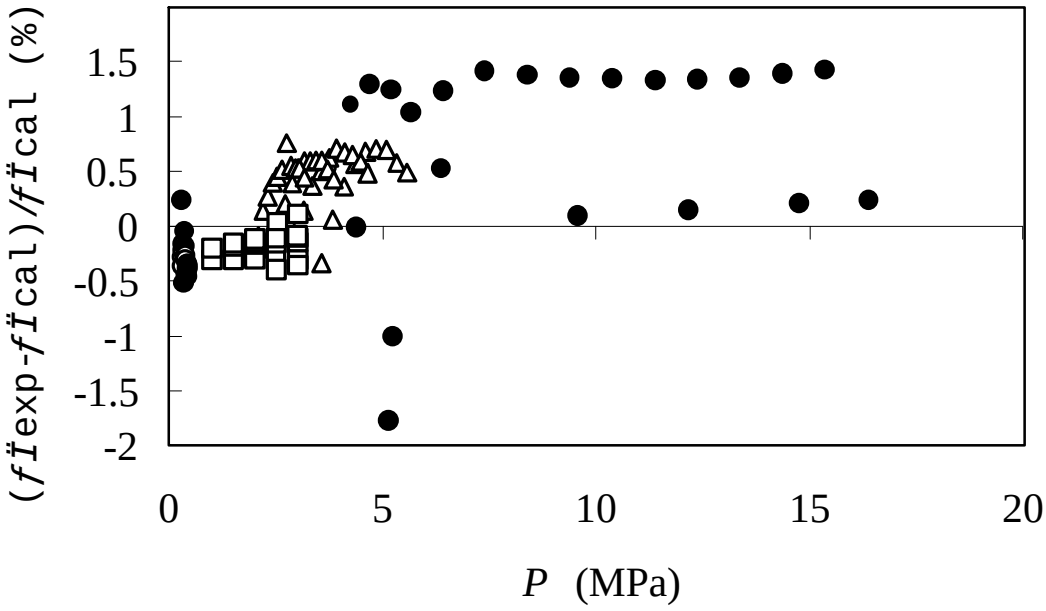

This Work x=39.17-39.71 mol%,=9.48-1062.05 kgm^{-3}
Sato x=39.53 mol%,=82.29-164.76 kgm^{-3}
Widiatmo x=39.53 mol%,=993.1-1206.5 kgm^{-3}

Fig. 2. (K. Oguchi et al.)

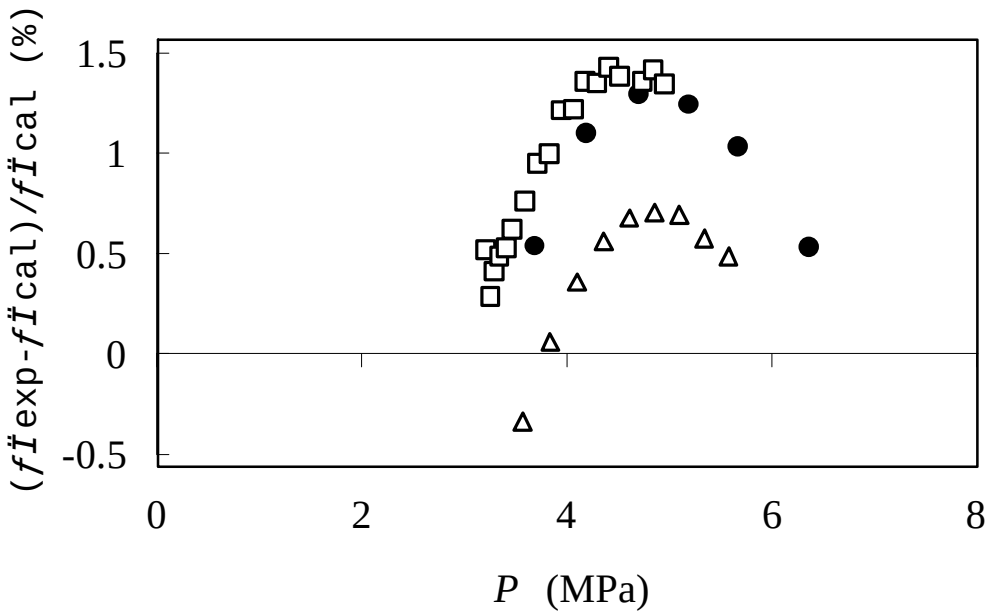

This Work x=39.39 mol%,=165.46-166.40 kgm^{-3}
Sato x=39.53 mol%,=164.10-164.76 kgm^{-3}
Fukushima x=45.36 mol%,=147.81-148.35 kgm^{-3}

Fig. 3. (K. Oguchi et al.)

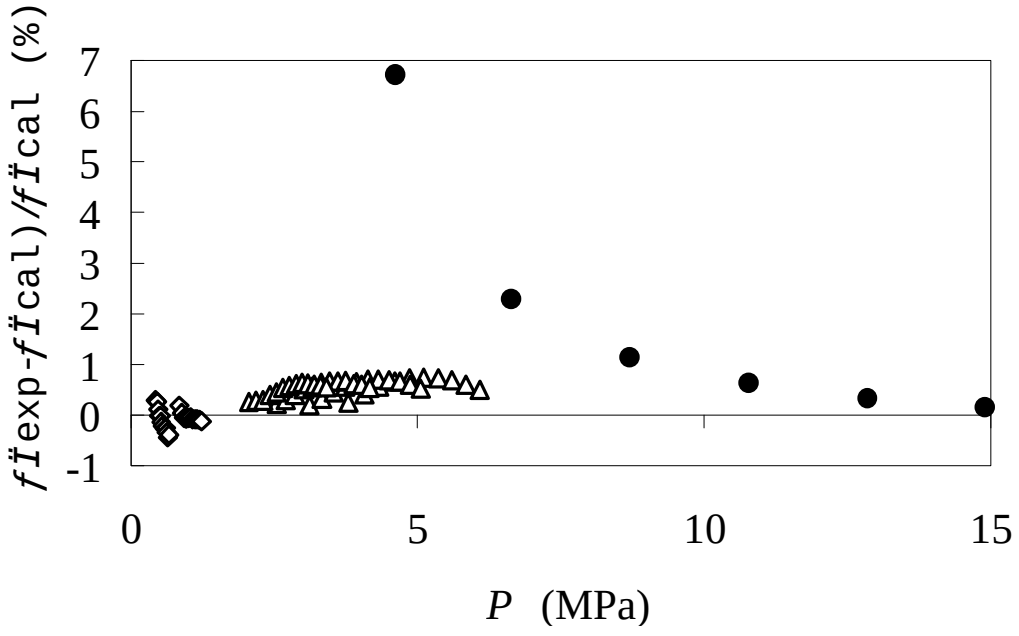

This Work x=74.66 mol%,=421.46-423.73 kgm^{-3}
Sato x=74.63 mol%,=68.51-137.22 kgm^{-3}
Piao x=74.62-74.63 mol%,=13.45-26.02 kgm^{-3}

Fig. 4. (K. Oguchi et al.)

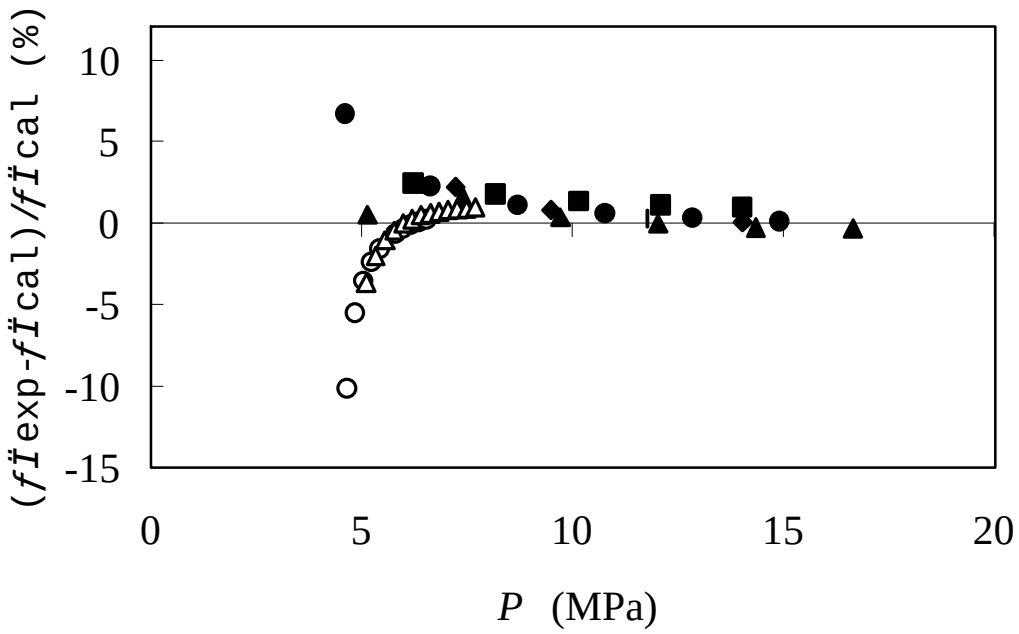

This Work x=66.22 mol%,=424.77-427.07 kgm^{-3}
This Work x=74.65 mol%,=421.46-423.73 kgm^{-3}
This Work x=85.47 mol%,=424.20-426.04 kgm^{-3}
This Work x=88.69 mol%,=421.05-423.33 kgm^{-3}
Piao x=32.88 mol%,=397.89-398.37 kgm^{-3}
Piao x=56.67 mol%,=397.79-398.36 kgm^{-3}

Fig. 5. (K. Oguchi et al.)