Measurement of the Specific Enthalpy of Vaporization on 1,1,1,2-Tetrafluoro-ethane in the Temperature Range from 180 K to 240 K [1]

W. Blanke,[2] G. Klingenberg,[2,3] and F. Weber [2]

---

[1] Paper presented at the Thirteenth Symposium on Thermophysical Properties, June 22- 27, 1997, Boulder, USA.

[2] Physikalisch-Technische Bundesanstalt, Bundesallee 100, D-38116 Braunschweig, Germany.

[3] To whom correspondence should be addressed.

ABSTRACT

A recently developed apparatus is described which is capable of measuring the enthalpy of vaporization in the temperature range from 100 K to 250 K. The sample (R134a, purity: at least 99.999 %) is located in the measuring cell at the saturated vapor pressure $p = p_s$. A control circuit allows p to be kept constant by opening a motor-operated valve to a weighing cylinder after having switched on the electrical measuring cell heater.

The temperature of the cell is measured by Pt 25 Ω thermometry and the temperature distribution in the cell is monitored using five Cu-constantan thermocouples. The pressure is measured using a Paroscientific transducer (0.115 MPa range). During the experiment, the temperature is kept constant within a few 10 mK.

In the range 190 K to 230 K the results are compared with data obtained from the fundamental equation given by Tillner-Roth and Baehr which is recommended by Annex 18 of the IEA. Good agreement within the standard uncertainty of 0.16 % is obtained. At temperatures of only 10 K above the triple point temperature, the enthalpy of vaporization calculated from the Clausius - Clapeyron equation shows a considerable uncertainty due to the determination of the small vapor pressure. It is chiefly in this range that it is advantageous to have the new apparatus.

KEY WORDS: enthalpy of vaporization; Clausius - Clapeyron equation

1. INTRODUCTION

High precision measurements of the enthalpy of vaporization on alternative refrigerants have not yet been performed, as far as we know. With the new apparatus developed at PTB, it is possible to measure this quantity at pressures up to 0.1 MPa with a relative measurement uncertainty of less than 0.16%. The confidence level is 68%. First measurements have been carried out on 1,1,1,2-tetrafluoroethane (R134a), a well-known substance with a fundamental equation established in 1994 by Tillner-Roth and Baehr [1]. This equation was recommended as an international standard by Annex 18 (Thermophysical Properties of Environmentally Acceptable Refrigerants) of the International Energy Agency (IEA). It is of considerable interest to compare the measured data with the fundamental equation, since no measured data of the enthalpy of vaporization were used when the fundamental equation was formulated.

2. EXPERIMENTS

2.1. Description of the Apparatus

The apparatus consists of the following main parts (Fig. 1):

- the measuring cell, located in an evaporation cryostat operated with liquid nitrogen
- a Paroscientific pressure sensor model 223 AT for the 0.1 MPa range, operated with a Hewlett-Packard 5384A frequency counter. The pressure sensor is calibrated with a dead weight tester, the relative measurement uncertainty is $1 \cdot 10^{-4}$.
- two motor-driven computer-operated fine metering valves, which together with the pressure sensor, form a PI control circuit to keep the pressure constant. The reason for

two valves is as follows: In the case of R134a, the vapor pressure at 240 K is about 26 times the vapor pressure at 190 K, and assuming a constant valve metering, the mass flow to the weighing cylinder at 240 K is about 420 times the mass flow at 190 K. Therefore, at least two different valves for the temperature ranges above and below 210 K are necessary.

- a Hewlett-Packard 6633A DC power supply and two 3457A multimeters to measure the voltage and the electric current of the heater located in the measuring cell, using 4-wire techniques.
- two Pt 25 Ω platinium resistance thermometers located in the measuring cell, an ASL switching unit and an ASL F17 measuring bridge. The Pt 25 Ω thermometers are calibrated according to ITS 90 at PTB Berlin.
- a PC giving the time necessary for the calculation of the electric energy and for the documentation of the measured data
- a weighing cylinder kept at the temperature of liquid nitrogen

The evaporation cryostat shown in Fig.2 was operated with liquid nitrogen. The coolant flows through a copper tube coil surrounding the measuring cell, which is also made of copper, and then evaporates. The cold gas then cools the radiation shield and flows through a control valve to the vacuum pump. Temperature control is ensured by a proportional controller combined with a thermistor as a temperature probe, and an electrodynamic control valve used as a control element to regulate the mass flowrate of the coolant. During the measurement, the space around the measuring cell is evacuated, and the sum of the heat transferred to the measuring cell and carried away from it is zero.

During temperature changes, this space is filled with helium to guarantee temperature balance.

At 20°C and atmospheric pressure, the measuring cell (Fig.3) has an inner volume of 80.8 cm^3 (a mass of 437.5 g). The cell was tested with pressure up to 5 MPa. The outer surface is gold plated to reduce radiation. The heater (wire-wound resistor, resistance: 68 Ω) with a maximum power consumption of 12 W and two Pt 25 Ω resistance thermometers are installed in the bottom of the measuring cell. The capillary connecting the cell with the tubing outside the cryostat has a wall thickness of 0.25 mm and an outer diameter of 4.5 mm. The whole capillary tubing is made of stainless steel.

2.2 Description of the measurement

Before starting the measurement, it is necessary to determine the mass of the weighing cylinder. After this, the measuring cell, the cryostat and the weighing cylinder are evacuated. When a vacuum of better than 0.1 Pa is reached, helium of a few kPa is introduced into the space between the measuring cell and the inner radiation shield, and the cryostat is cooled down to the measuring temperature. The heater of the upper part of the radiation shield, where the capillary enters the cryostat (Fig.3), is then switched on. The substance to be investigated is condensed into the measuring cell. After thermal equilibrium is reached, the space between the measuring cell and the inner radiation shield is also evacuated, and the temperature is monitored during the night. If the temperature stability is sufficient (better than 5 mK/h) and temperature gradients along the cell and tubing are small and in the right direction, the vapor phase is removed from the probe to prevent problems arising from air, which still may be trapped in the measuring cell. The related temperature decrease is compensated by operating the

measuring cell heater. After thermal equilibrium is established, the vapor pressure is measured, and this value is taken as a reference. When the heater is switched on, the valve to the weighing cylinder (placed in liquid nitrogen) is operated in such a way that the pressure is kept equal to the reference pressure. When a sufficient amount of mass (≈10g) is condensed into the weighing cylinder, the measuring cell heater is switched off. At the end of the measurement, the vapor pressure is measured again. No significant difference in the vapor pressure and the cell temperature between the beginning and the end of the measurement was found. After changing the weighing cylinder, it is possible to repeat the measurement.

2.3 Viscous flow correction

Fig.4 is a simplified schematic diagram of the new apparatus. At the beginning of the measurement, before the cell heater is switched on, the measured pressure is $p_m = p_1 = p_{sat}$. Since p_m is kept constant during the evaporation of R134a, it was found that $p_m = p_{sat} < p_1$, due to a pressure gradient along the tubing from the measuring cell to the control metering valve. The pressure drop is estimated using the Hagen - Poiseuille law:

$$\Delta p = p_1 - p_{sat} = 8\ V\ L\ \eta\ /\ (\ \Pi\ R^4\ t\ ) \qquad (1)$$

L = 1.1 m is the length of the capillary tubing with the inner radius R = 2 mm from the measuring cell to the Paroscientific transducer, η the dynamic viscosity of the saturated vapor taken from REFPROP [2], t the time of evaporation, and $V = m / \rho$ the volume flow, to be calculated from the evaporated mass m and the saturated vapor density. At 180 K, Δp = 14.7 Pa is calculated corresponding to a temperature increase of the measuring cell of 0.13 K during evaporation, and the specific enthalpy of vaporization

0.3% too small. At 200 K, the correction may be neglected, e.g. Δp = 1.8 Pa, the temperature increases less than 0.01K,and the enthalpy of vaporization is 0.002% too small.

2.4 Working Equation

From the first law of thermodynamics and the definition of the specific enthalpy of vaporization h_v it can be seen that

$$h_v = Q [1 - (\rho'' / \rho')] / m \qquad (2)$$

where Q is the (electrical) energy dissipated in the measuring cell heater, m is the resulting mass condensed into the weighing cylinder. ρ' and ρ'' are the saturated liquid and vapor densities. During the experiment, in the measuring cell the evaporated amount of liquid is replaced by saturated vapor. This small amount of vapor is located in the measuring cell, not in the weighing cylinder, and it is the reason for the correction term $1 - (\rho'' / \rho')$ in Eq. (2). For more details on the derivation of Eq. (2), the reader is referred to the paper by Ginnings and Stimson [3].

2.5 Estimation of the measurement uncertainty

The estimated standard deviation [4] of the specific heat of vaporization is given by

$$s_{hv} = \{ [h_v^2 s_Q^2 / Q^2] + [h_v^2 s_m^2 / m^2] + [Q^2 \rho''^2 s_{\rho'}^2 / (m^2 \rho'^4)] + [Q^2 s_{\rho''}^2 / (m^2 \rho'^2)] + $$
$$+ [(dh_v /dT)^2 s_T^2] + [(dh_v /d\Delta p)^2 s_{\Delta p}^2] \}^{1/2} , \qquad (3)$$

where s_Q, s_m, $s_{\rho'}$, $s_{\rho''}$, s_T, $s_{\Delta p}$, are the estimated standard deviations of the energy, the mass, the saturated liquid and vapor density, the temperature, and the Δp correction term. The first term includes heat leaks of the adiabatic calorimeter. In the temperature range under consideration, this makes the largest contribution to the measurement

uncertainty. To find the quantity of the heat leakage, the sealed cell partly filled with R134a was heated up with 58.8 J, resulting in a temperature increase of 0.256 K of the measuring cell. After three hours, the time necessary for an evaporation experiment, this temperature difference has decreased to 0.191 K. Since during the evaporation experiment, maximum temperature deviations from the equilibrium value of less than 0.2 K were observed, a maximum heat leakage of 10.75 J is estimated during the measuring period of three hours. The determination of the mass of gas within the weighing cylinder (typically 10 g) is possible to within ± 2 mg. The third and fourth term on the right-hand side of Eq. (3) is small, too. The density of the saturated liquid and vapor is sufficiently well known from the fundamental equation to calculate the correction factor in Eq. (2). In equilibrium, the temperature measurement is performed with a standard uncertainty of 2 mK. During the heating of the measuring cell, the temperature in the evaporating liquid layer is maintained constant by the pressure control already mentioned. At 200 K, pressure fluctuations are up to $1 \cdot 10^{-3}\, p_s$, corresponding to temperature fluctuations of up to 12 mK. Therefore, the fifth term in Eq. (3) is also small. The last one takes into account the viscous flow correction term. Since Hagen-Poiseuille's law is not modified for gases, the temperature gradient along the tubing is neglected, and the inner diameter of the tubing is not measured, it is assumed that the correction term Δp lies within $\pm \Delta p$. Thus, the relative standard uncertainty of the enthalpy of vaporization of R134a in the temperature range from 180 to 230 K is estimated to be less than $1.6 \cdot 10^{-3}$.

3. RESULTS

The experimental results are given in Table I. The relative differences of these measured values from the specific enthalpy of vaporization of R134a calculated from the fundamental equation [1] are shown in Fig.5. At 225 K, there is a lack of repeatability. At 240 K, the pressure control does not work fast enough to keep the pressure constant. From the Clausius-Clapeyron equation

$$h_v = T\,(dp/dT)\,[\,(1/\rho'') - (1/\rho')\,], \qquad (4)$$

Tillner-Roth [5] estimated a relative measurement uncertainty of the specific enthalpy of vaporization of $3 \cdot 10^{-3}$ (99% confidence level) at 200 K, using his own fundamental equation. This uncertainty increases with decreasing temperature for the following reasons: p decreases to quite small values, therefore the standard uncertainty of (dp/dT) increases and no measurements of ρ'' in this temperature range are known. At temperatures from 190 K to 230 K, good agreement between the measured and the calculated data within the combined standard uncertainty is achieved. At 180 K, all three measured data are about 0.5% larger than the calculated values.

ACKNOWLEDGMENT

The authors wish to thank Dr.J.Jäger for many stimulating discussions.

REFERENCES

1. R. Tillner-Roth and H. D. Baehr, *J. Phys. Chem. Ref. Data* **23**: 657 (1994)

2. M. Huber, J. Gallagher, M. McLinden, G. Morrison, *NIST Standard Reference Database 23 (REFPROP) Version 5.0* (U.S. Department on Commerce, Technology Administration, Gaithersburg, 1996)

3. D. C. Ginnings, H. Stimson, in *Experimental Thermodynamics*, Vol. I, J. P. McCullough and D. W. Scott eds. (Butterworth, London, 1968), p. 395.

4. *Guide to the Expression of Uncertainty in Measurement.* (ISO, Genf, 1993)

5. R. Tillner-Roth, *Personal Communication.* (1997)

Table I. Experimental Results for the Enthalpy of Vaporization h_v of R134a

No.	T_{90} / K	h_v / J g^{-1}
1	180.295	258.47
2	180.292	258.36
3	180.204	258.67
4	184.862	255.06
5	190.287	251.03
6	199.868	245.49

7	199.908	245.32
8	210.296	239.48
9	210.263	239.75
10	215.310	236.72
11	219.951	233.77
12	219.985	233.66
13	225.083	230.90
14	225.154	230.87
15	225.196	230.14
16	228.699	228.93
17	239.900	222.35
18	239.867	222.52

FIGURE CAPTIONS

Fig. 1. pvTh apparatus:

1 measuring cell, 2 cryostat, 3 Paroscientific pressure transducer,

4 gas supply, 5 weighing cylinder, 6 computer operated valves

Fig. 2. Evaporation cryostat:

1 measuring cell, 2 measuring cell heater, 3 Pt 25 Ω thermometer,

4 inner radiation shield, 5 outer radiation shield,

6 chamber for contact gas, 7 evaporation tube, 8 LN_2 inlet,

8 N_2 outlet, 9 vacuum, 10 thermometer

Fig. 3. Measuring cell with copper-constantan thermocouples T0 ... T6:

1 Pt 25 Ω thermometer, 2 measuring cell heater, 3 radiation shield,

4 radiation shield heater, 5 capillary tubing heater

Fig. 4. Schematic diagram

1 weighing cylinder kept at the temperature of liquid nitrogen,

2 control metering valve, 3 Paroscientific pressure transducer,

4 measuring cell

Fig. 5. Relative deviations ($h_{v\ meas}$ - $h_{v\ cal}$) / $h_{v\ cal}$ of measured enthalpies of vaporization from enthalpies of vaporization calculated with the fundamental equation of Tillner-Roth and Baehr [1]

FIGURES

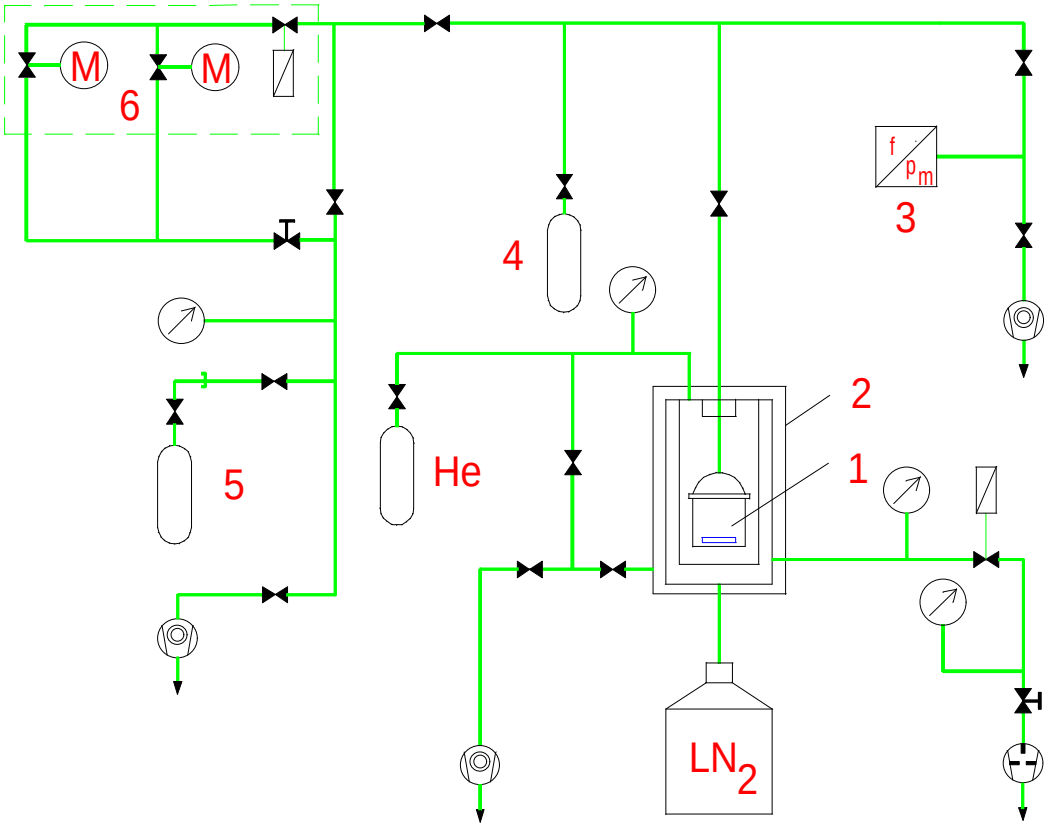

Fig. 1.

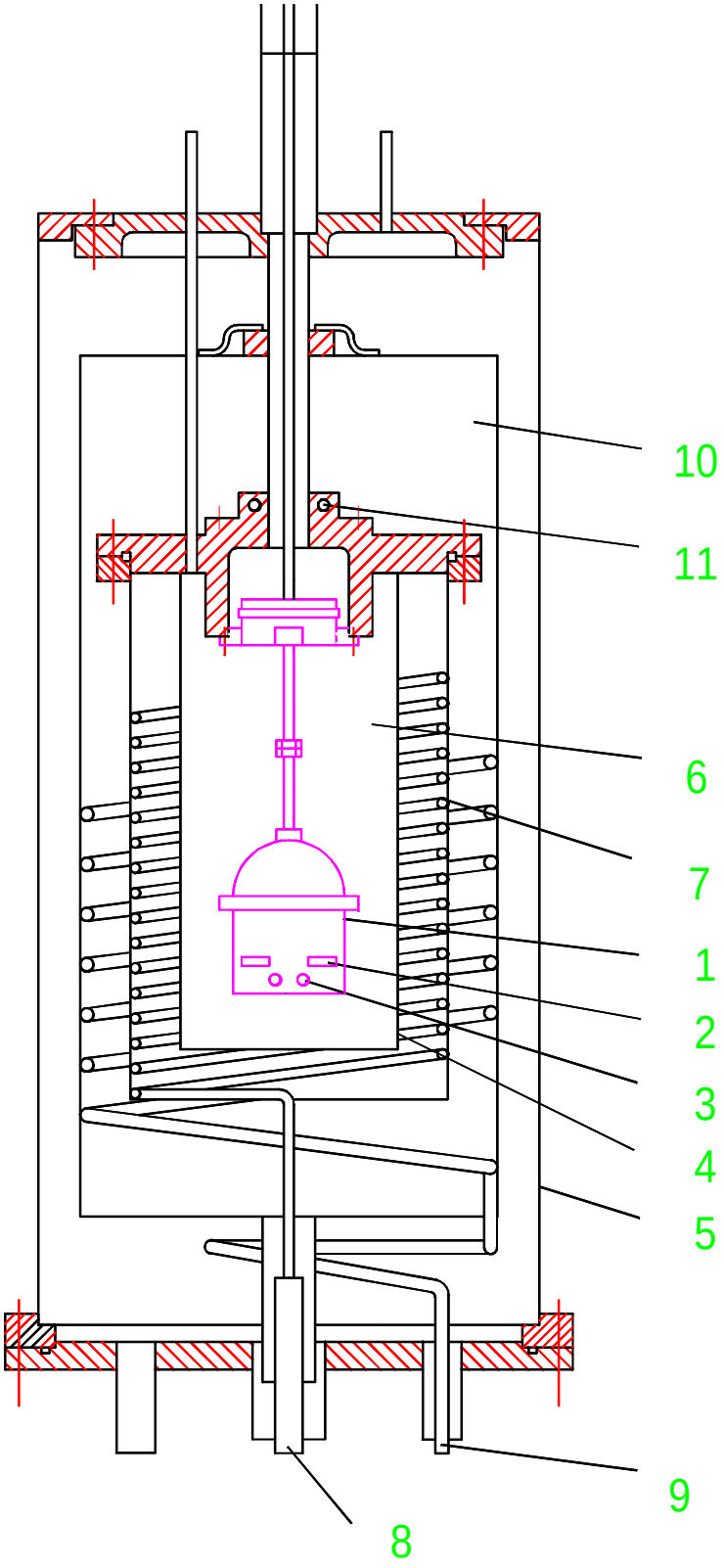

Fig. 2.

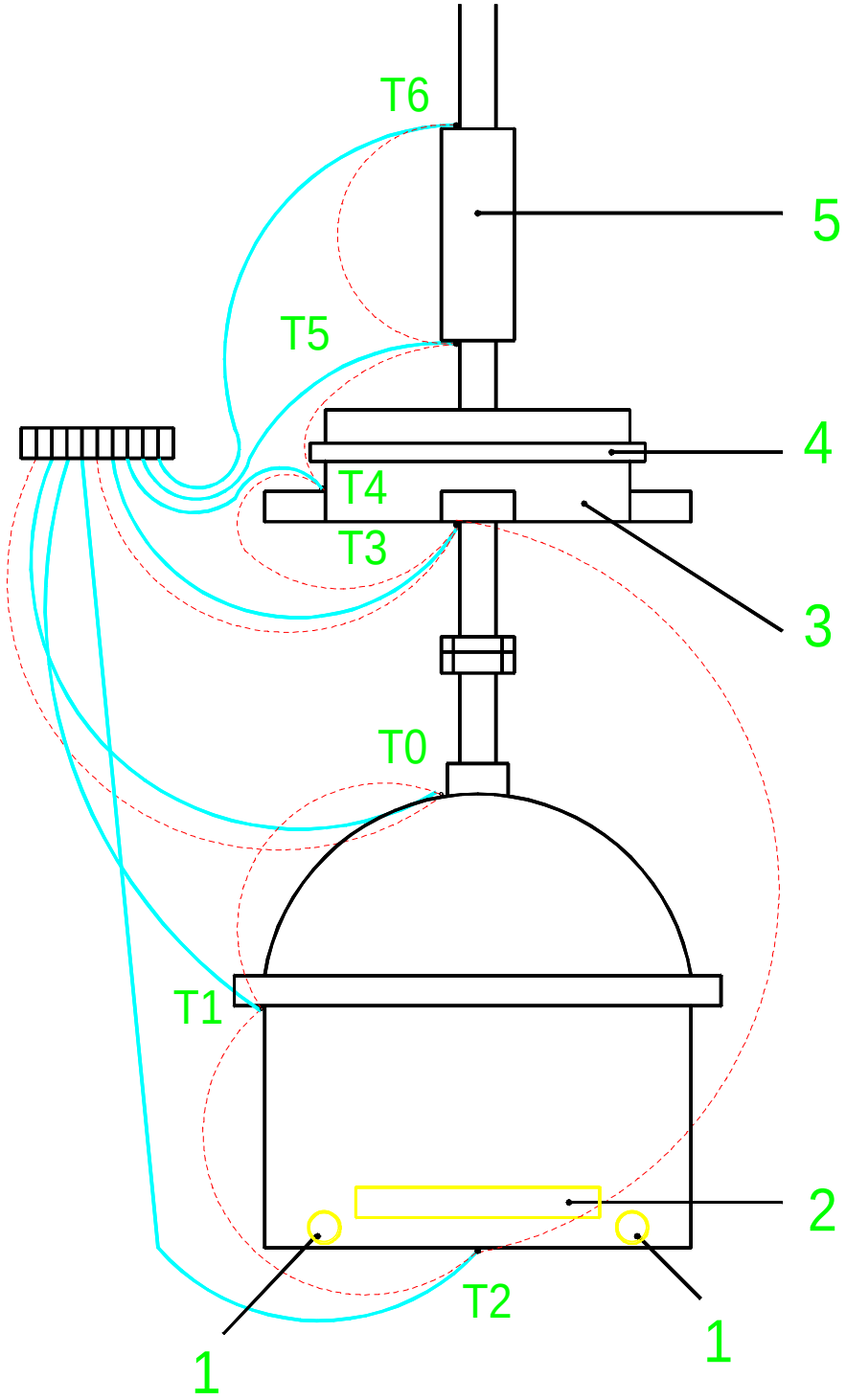

Fig. 3.

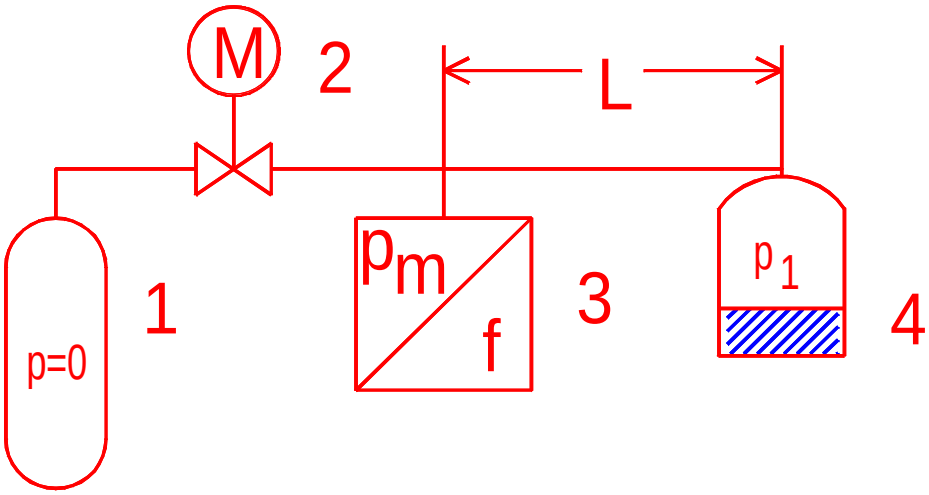

Fig. 4.

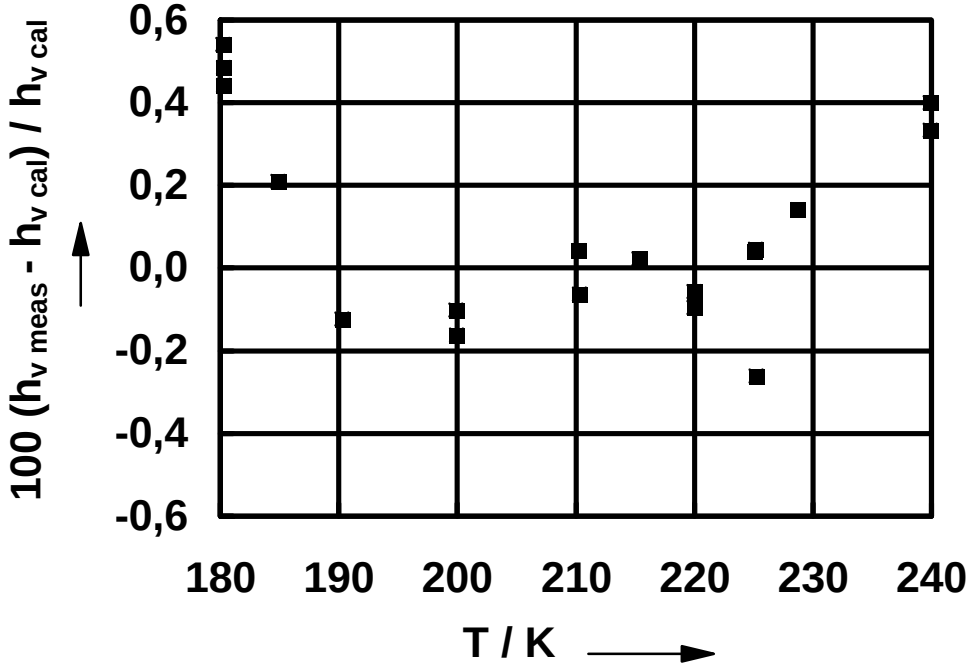
0,6
0,4
0,2
0,0
-0,2
-0,4
-0,6
100 (h v meas - h v cal) / h v cal
180
190
200
210
220
230
240
T / K

Fig. 5.