# THE CELL MODEL OF SOLID-LIQUID EQUILIBRIA IN TWO AND THREE DIMENSIONS: ANALYTIC SPATIAL FREE VOLUME INTEGRATION [1]

James C. Rainwater
Physical and Chemical Properties Division, National Institute of Standards and Technology, Boulder, CO 80303

[1]Draft, subject to revision. Contribution of the National Institute of Standards and Technology, 

April 15, 1997

**ABSTRACT**

Monson has successfully calculated the solid-liquid transition temperature of various substances by modeling their molecules as hard dumbbells, with subsequent perturbative addition of quadrupole moment and van der Waals attractive terms. He also has shown that the solid free energy of the reference hard dumbbell system can be calculated accurately from the cell model of Lennard-Jones and Devonshire, and calculated one-body partition functions by Monte Carlo integration. In this work it is shown that for fixed orientation of the test molecule, the free volume can be calculated in closed form, thereby requiring numerical integration only over angular variables. The calculation is explicitly performed in two dimensions and the feasibility of the method is demonstrated in three dimensions.

**KEY WORDS**

analytic solution, cell model, hard dumbbell, solid-liquid equilibria, three dimensions, two dimensions

## 1. Introduction

Molecular shape is very important in determining the freezing point of a substance, much more so than for fluid properties. A good example is behavior of the pentane isomers, n-pentane, isopentane, and neopentane. These isomers have nearly the same critical temperatures, respectively 469.7 K, 460.4 K, and 433.8 K, but very different freezing-point temperatures ( or, almost equivalently, triple-point temperatures), respectively 143.4 K, 113.3 K, and 256.6 K [1]. As this example makes clear, the more irregularly shaped a molecule, the more difficult it is to arrange a system of them in a solid lattice, and any theory of solid-liquid equilibria ( SLE ) applicable to a wide variety of substances must explicitly account for molecular shape.

A very promising theoretical approach for SLE has recently been developed by Monson and co-workers, in which molecules are first modeled as rigid assemblies of hard spheres, with van der Waals attractive terms and quadrupole moments then introduced as perturbations [2-6]. Simple symmetric, slightly elongated molecules have been modeled as hard homonuclear dumbbells [2,3], and propane has been modeled as an assembly of three hard spheres at fixed bond angle [4]. The theory has predicted semi-quantitatively the large ratio of triple-point temperature to critical temperature of carbon dioxide and acetylene [2] and the small ratio for propane [4]. Applications have been made to heteronuclear dumbbells [7] and appear feasible for a wide variety of molecular shapes as assemblies of hard spheres with differing radii.

Both the solid and liquid phases require calculation of free energies, but here we will only consider the solid phase. The hard particle system can be simulated, but Monson and co-workers have shown that the cell model of Lennard-Jones and Devonshire [8] can yield a free energy in close agreement with simulation, but with much less computer time. The cell model assumes a test molecule is confined in a cage of fixed neighboring molecules of a specified lattice structure, and the solid partition function $Q_N$ is calculated in terms of the free volume (in position and orientation space) of the test molecule. In particular , $Q_N = N!Q_1^N$, where:

$$Q_1 = \left[(2d-2)\pi\right]^{-1} \int d\Omega \int dr \ \exp\left[-u(r,\Omega)/k_B T\right] \qquad \textbf{(1)}$$

Here d = 2 or 3 is the dimension, Ω is the ( plane or solid ) angle, **r** is the position vector, u is the potential energy, $k_B$ is Boltzmann's constant and T is temperature. For hard systems, the exponential term is either zero or one, so the integral is the free volume. In three dimensions, the five-dimensional integral of Eq. 1 has previously been evaluated by Monte Carlo integration [2,6]. In this work, we examine the possiblity of performing the spatial integration analytically, thus reducing the expression to a two-dimensional angular integral. With such a reduction, the integral can be calculated efficiently by polynomial quadrature techniques such as Gauss-Legendre or Clenshaw-Curtiss [9] with significantly less time and greater accuracy than by Monte Carlo integration. A more efficient integration method then enables calculation over a wider range of molecular, density, and lattice parameters.

While our primary case of interest is the three-dimensional solid, the two-dimensional solid is an instructive simplified prototype that has been the subject of previous analysis, particularly by Wojciechowski and co-workers [10,11]. In this case, Eq. (1) reduces to integration over one angular and two spatial variables. For the two-dimensional solid, we show how to calculate the reduced partition function as a numerical integral over a single angular variable, and demonstrate the feasiblility of performing the analogous calculation for a three-dimensional solid.

## 2. Partition function calculation for two-dimensional cell theory

A test molecule at fixed orientation can slide along the edge of a fixed cage atom as shown in Figure 1. In the most general case, R is the radius of the hard sphere cage atom, r is the radius of an atom on the test molecule, **e** is the unit vector along the axis of the test molecule (which we can take, at first, to be along the x axis ), and L is the distance from the center of the test atom to the test molecule center of mass. As specified by Monson and co-workers in reduced units for homonuclear dumbbells, r = R = 1/2 and $L = L^*/2$, where $L^*$is the bond length. If the center of the atom on which the dumbbell slides is the origin, (0,0,0), the equation for the position of the dumbbell center of mass in three dimensions (x,y,z) is:

$$(x-L)^2 + y^2 + z^2 = (R + r)^2 \qquad \textbf{(2)}$$

which also holds for two dimensions if $z = 0$. More generally, for any direction of **e**, the center of mass moves along a sphere or circle of radius ( R + r ) centered at the point ($\mathbf{r_c}$ + **e** L ), where $\mathbf{r_c}$ is the center of the cage molecule sphere on which the test molecule slides.

In two dimensions, at fixed orientation the test molecule can thereby occupy a region bounded by a series of arcs of circles centered at points displaced from the cage atom centers by a vector ± **e** $L^*/2$. These arcs describe the sliding by either the left or the right disk of the test molecule on cage molecules.

Figure 2 shows the simplest two-dimensional hard dumbbell lattice, defined by Wojciechowski [11] as the simple oblique lattice. The lattice has been expanded linearly by 25% from the case of close packing, and only those molecules which touch the test molecule at close packing are shown as cage molecules with assigned numbers. Paras, et al. [6] have demonstrated that the lattice structure at the phase transition has axis angles approximately in the same direction as those of close packing, so our particular examples will be that type of expansion.

In Fig. 2, we show the test molecule in different positions and illustrate our definitions of a bridge, bay, and waist for the cage with the test molecule at fixed angle $\theta$ (positive if counterclockwise, negative if clockwise). For different intervals of $\theta$, the boundary of the available area for the test molecule is bounded by a series of arcs as shown in Fig. 3, where the corners correspond to bridges, bays, or waists as the test molecule slides along its confining path. For small clockwise $\theta$, the path is: Start with 1R in 7R-2L bay; 1R slides on 2L to 2L-3L bay; 1R on 3L to 3L-4R bridge; 1L on 4R to 4L-4R waist; 1L on 4L to 5R-4L bay; 1L on 5R to 5R-6R bay; 1L on 6R to 6R-7L bridge; 1R on 7L to 7L-7R waist; and 1R on 7R to 7R-2L bay, the starting point.

As shown in Fig. 3, the path is described by arcs of circles with centers displaced from the centers of the cage discs by $\mathbf{e}L^*/2$ ($\mathbf{e} = \mathbf{e}_x \cos\theta + \mathbf{e}_y \sin\theta$) if 1L is the contact disk, or by $-\mathbf{e}L^*/2$ if 1R is the contact disk. We denote these displaced centers by NL+ or NR+ if displaced by $\mathbf{e}L^*/2$ and

NL- or NR- if displaced by $-\mathbf{e}L^*/2$ . The above path then may equivalently be described by arcs from the following sequence of centers: 2L-,3L-,4R+,4L+,5R+,6R+,7L-, and 7R-.

The free area boundary paths are qualitatively different for different intervals of $\theta$. Transition angles, which depend on $L^*$, the lattice expansion, and more generally the lattice angles, may be calculated in closed form by simple geometric considerations. They follow a specific qualitative pattern as long as the expansion parameter is not too large. As an example, for $L^* = 0.5$ and 15% expansion, the previous description holds for $0.0° > \theta > -8.027°$, which is the first clockwise (CW1) interval. The other paths for clockwise $\theta$ are as follows:

CW2: $-8.027° > \theta > -27.611°$; 2L-,4R+,4L+,5R+,7L-,7R-.

CW3: $-27.611° > \theta > -31.115°$; 4R+,4L+,7L-,7R-.

CW4: $-31.115° > \theta > -31.832°$; 4R+,4L+,7L- or 4R+,7L-,7R-.

and the paths for counterclockwise theta are:

CCW1: $0° < \theta < 8.618°$; 2L-,3L-,4R+,4R-,4L-,5R+,6R+,7L-,7L+.

CCW2: $8.618° < \theta < 18.426°$; 2L-,3L-,4R-,5R+,6R+,7L+.

CCW3: $18.426° < \theta < 34.973°$; 3L-,4R-,6R+,7L+.

CCW4: $34.973° < \theta < 38.307°$; 3L-,4R-,7L+ or 4R-,6L+,7L+.

Boundaries for the largest counterclockwise angles are shown in Fig. 3b. In this case the test molecule is nearly wedged into either the 6R-7L bay or the 3L-4R bay, but cannot move from one to the other, so the allowed area is given by the two small disconnected triangle-like areas. As $\theta$ approaches its maximum possible value of 38.307°, these small areas shrink to zero.

Figure 4 shows the analytically calculated free area for this example as a function of $\theta$ and by angular interval. The area is continuous but has discontinuous dervatives at the transition angles, so the most accurate way to integrate the area $A(\theta)$ is by polynomial quadrature for each separate interval. When evaluated in such a manner by Clenshaw-Curtis integration [9], the integral for this example is $(2\pi)^{-1}\int A(\theta)d\theta = 1.04 \times 10^{-2}$.

## 3. Methods for three-dimensional free volume calculation

In this work for three dimensions, we do not explicitly carry out a cell model calculation as in the two-dimensional case, but we demonstrate the feasibility of such a calculation. The method should be applicable to any lattice of rigid assemblies of hard spheres, but we can consider, as the simplest case, a homonuclear hard dumbbell lattice structure such as CP1 of Vega, et al. [5], in which all molecules are oriented in the same direction. Such a lattice is similar to that of Fig. 2 in that molecules in a row along the (slanted) y direction lie in a plane, but those to the left are slightly into, and those to the right slightly out of, the plane of the figure. There are additional molecular layers into and out of that plane, so that the cage in this case has twelve, rather than six, molecules.

The orientation of the test molecule is specfied by two angles, which can be spherical angles $\theta$ and $\phi$ relative to an axis oriented in the direction of the lattice molecules. Since Eq. 1 applies also in three dimensions, the free volume at fixed orientation is now bounded by spherical surfaces analogous to the previous arcs of circles. In fact, the free volume is the hollow space bounded by a number of spherical polygons generated by the intersection of spheres with centers displaced by the cage dumbbell spheres by $\mathbf{e}L^*/2$ or $-\mathbf{e}L^*/2$; a space that can be visualized as like a geodesic dome with convex windows as viewed from the inside.

The objective then is to calculate the volume of this hollow space. While an initial calculation shows that the spherical polygons can have as many as six sides, they can be subdivided into spherical triangles such that the corners of the triangle form a plane. A skewed pyramid can be formed from the cage center to the plane triangle, the volume of which is easily calculated as one-third the triangle area times the perpendicular drop from the center. The contribution of a given triangle to the free volume is the volume of the skewed pyramid minus the volume of the spherical triangle protrusion.

For a given spherical triangle protrusion, let us orient the axes of the sphere such that its primary axis, the z direction, is perpendicular to the plane of the triangle. The protrusion then can be divided into three volumes as shown in Fig. 5. We can orient this volume such that the (x,y,z) position of the two vertices of the original spherical triangle are $A = ( -x_0, y_0, z_0 )$ and $B = (x_0, y_0, z_0)$ with $x_0 = ay_0$ and $y_0 = bz_0$. Here (0,0,1) is the pole of the sphere P. Note that there are only two independent variables, for example $x_0$ and b, due to the constraint $x_0^2 + y_0^2 + z_0^2 = 1$. The

volume of Fig. 5 is constructed by slicing the sphere by the horizontal plane $z = z_0$ from below, the vertical planes $y = -ax$ (through P and A) and $y = ax$ (through P and B), and a plane of arbitrary angle through A and B, $(y-y_0) = b'(z-z_0)$. If the side AB is the intersection of two separate spheres, b' depends on the particular geometry. In general, this plane intersects the sphere in a circle but not a great circle; the intersection is like a circle of latitude rather than longitude. When b = b', that circle is a great circle, and we can choose b = b' if the side AB is a boundary between two spherical triangles on the same sphere (a subdivision of a given spherical polygon).

In the case that b = b', we can consider half of this figure (divided by the plane y = 0) and use the law of sines of spherical geometry [12]:

$$\frac{\sin\alpha}{\sin a} = \frac{\sin\beta}{\sin b} = \frac{\sin\gamma}{\sin c} \qquad \textbf{(3)}$$

where α, β, and γ are the angles of a spherical triangle (composed of great circles) and a, b, and c are the opposite arc lengths in radians, and the spherical triangle area formula:

$$A = \alpha + \beta + \gamma - \pi \qquad \textbf{(4)}$$

for the area A of a spherical triangle (composed of great circles) on a unit sphere and thus for the solid angle subtended by the triangle. When b = b', the volume of the object in Fig. 5 is then the volume bounded by the sphere and the planes $y = ax$, $y = -ax$, and $z = by$, all of which intersect at the spherical center, minus the volume of the pyramid bounded by $y = ax$, $y = -ax$, $z = by$, and $z = z_0$. This volume $V_1$ is then:

$$V_1 = \frac{2}{3}\left[\sin^{-1}\left(\frac{1}{\sqrt{b^2+1}\,\sqrt{1-z_0^2}}\right) + \sin^{-1}\frac{x_0}{\sqrt{1-z_0^2}}\right] - \frac{\pi}{3} - \frac{1}{3}x_0 y_0 z_0 \qquad \textbf{(5)}$$

We next consider the wedge-like volume $V_2$ bounded by the sphere and two planes through points A and B, a vertical plane $y = y_0$ and a slanted plane $z = by$. In Cartesian coordinates, this

volume is given by the following multiple integral, which reduces by a tedious but straightforward calculation [$y_{max} = (b^2 + 1)^{-1/2}$] to:

$$V_2(x_0,b) = 2\int_{y_0}^{y_{max}} dy \int_0^{\sqrt{1-(b^2+1)y^2}} dx \int_{by}^{\sqrt{1-x^2-y^2}} dz = \frac{b x_0^3}{3(b^2+1)} - (y_0 - \frac{1}{3}y_0^3)\ \sin^{-1}\frac{x_0}{\sqrt{x_0^2+z_0^2}}$$

$$+ \frac{b}{3}y_{max}\sqrt{y_{max}^2 - y_0^2} + \frac{1}{3}\left[\sin^{-1}\frac{b^2 + 1 - \frac{b^2}{1-y_0}}{\sqrt{b^2+1}} + \sin^{-1}\frac{b^2 + 1 - \frac{b^2}{1+y_0}}{\sqrt{b^2+1}}\right] \quad \textbf{(6)}$$

We then note that, from geometrical considerations, $V_2$ depends only on the distance between points A and B, here $2x_0$, and the angle between the two planes, here $\cot^{-1} b$. Thus the volume in Fig. 5 is $V_1 - V_2'$, where $V_2' = V_2(x_0, b'')$ and $\cot^{-1} b'' = \cot^{-1} b - \cot^{-1} b'$.

This result has been extensively checked by comparison with three-dimensional Monte Carlo integration and by one-dimensional quadrature integration over the final dimension of the analytic solution, and against an alternative analytic expression for $V_1$-$V_2$. With these results, we thus have the capacity in principle to calculate the free volume in closed form for fixed orientation of the test molecule. The partition function, Eq. (1), then requires only a two-dimensional numerical integration over the two angular variables. The solution can also be compared with a previous analytic result for hard spheres [13] which corresponds to the limiting case $L^* = 0$.

## Conclusions

For the d-dimensional lattice, the cell model requires integration over d spatial and (d-1) angular variables. We have shown for 2 and 3 dimensions that the spatial integration can be done in closed form, leaving an angular integral to be done numerically.

Work is in progress to calculate the complete integral for the simple CP1 3-dimensional lattice [5], as has been done here for a specific example of the two-dimensional lattice. The challenge is to develop an efficient and reliable algorithm to specify the spherical polygon free volume boundaries

for a given test molecule orientation. In the space of spherical angles $\theta$ and $\phi$, the volume function is smooth over specific domains of ($\theta$, $\phi$) space but will have derivative discontinuities at those domain boundaries, in analogy with Fig. 4. We will then search for the combination of quadrature methods which are best able to perform the angular integration accurately and efficiently, and will compare with results from Monte Carlo integration. If successful, the methods will be extended to other homonuclear and heteronuclear dumbbell lattice structures.

**Acknowledgments**

The author thanks Daniel Friend, Shawn Gay, and Paul Beale for valuable suggestions.

REFERENCES:


1. R. C. Reed, J. M. Prausnitz and B. E. Poling, The Properties of Gases and Liquids, Fourth Edition ( McGraw-Hill, New York, 1987 ), p. 694.

2. C. Vega and P. A. Monson, Mol. Phys. 85:413 (1995).

3. E. P. A. Paras, C. Vega, and P. A. Monson, Mol. Phys. 79:1063 (1993).

4. W.-N. Shen and P. A. Monson, J. Chem. Phys. 103:9756 (1995).

5. C. Vega, E. P. A. Paras, and P. A. Monson, J. Chem. Phys. 96:9060 (1992).

6. E. P. A. Paras, C. Vega, and P. A. Monson, Mol. Phys. 77:803 (1993).

7. S. C. Gay, P. D. Beale, and J. C. Rainwater, Int. J. Thermophys., to be published.

8. J. E. Lennard-Jones and A. F. Devonshire, Proc. Royal Soc. London 163:53 (1937).

9. C. W. Clenshaw and A. R. Curtis, Numer. Matl. 2:197 (1960).

10. K. W. Wojciechowski, D. Frenkel, and A. C. Branka, Phys. Rev. Lett. 66:3168 (1991).

11. K. W. Wojciechowski, Phys. Rev. B 46:26 (1992).

12. H. S. M. Coxeter, Introduction to Geometry ( Wiley, New York, 1961), p. 95.

13. R. J. Buehler, R. H. Wentorf, J. O. Hirschfelder, and C. F. Curtiss, J. Chem. Phys. 19:61 (1951).

FIGURE CAPTIONS

Fig. 1. Geometry for Eq. 2. For the test molecule of fixed orientation along the x direction, L and R are the centers of the left and right atoms. The molecule slides along the cage atom with center A along a circle (or sphere in 3 dimensions) with center B, where AB = LC.

Fig. 2. Simple oblique lattice at 25% expansion for two-dimensional hard dumbbells of $L^* = 0.5$. The test dumbbell is labeled 1, the cage dumbbells 2 through 7 as shown. For each dumbbell the left disk is labeled L and the right disk R. The test dumbbell at an angle of 35 ° is shown in the 4R-2L bridge (dashed curve), 7R-2L bay (solid curve) and 8L-8R waist (dotted curve).

Fig. 3. Boundary of the free area for the center of mass of a test dumbbell in a cage expanded by 15% at an angle of (a) -1 ° and (b) 36 °, where each arc is labeled by its center. In case (b), the only allowed regions are the two small triangle-like areas.

Fig. 4. Free area of a test dumbbell in a cage expanded by 15% as a function of orientation angle (dotted curve). Angular intervals are labeled as in the text, where CW is clockwise and CCW is counterclockwise.

Fig. 5. Diagram of the three-dimensional figure for which an analytic expression for volume is derived, as observed from below. P (0,0,1) is the pole of the sphere and A ($-x_0$, $y_0$, $z_0$) and B ($x_0$, $y_0$, $z_0$) are at the corners of the figure.

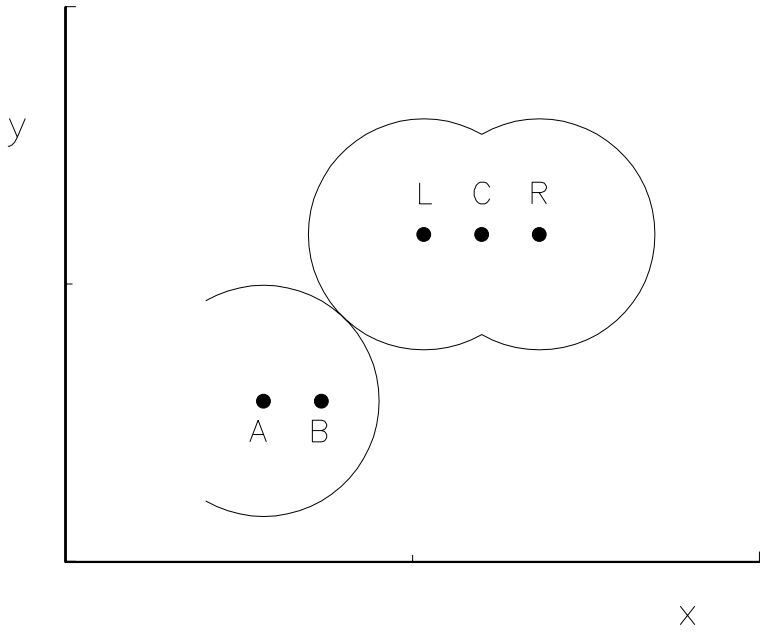
y
L C R
A B
x

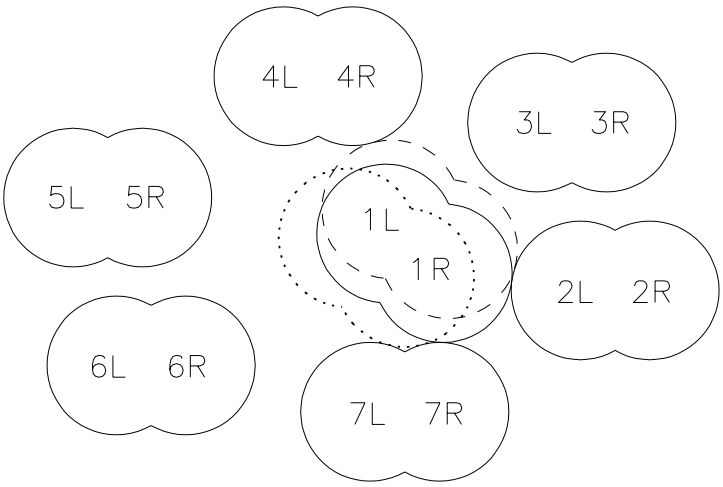
4L 4R
3L 3R
5L 5R
1L
1R
2L 2R
6L 6R
7L 7R

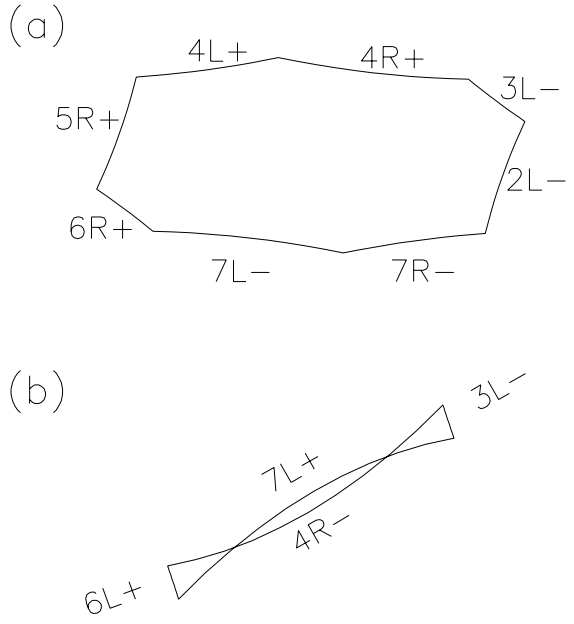
(a)
4L+
4R+
3L−
5R+
2L−
6R+
7L−
7R−
(b)
3L−
7L+
4R−
6L+

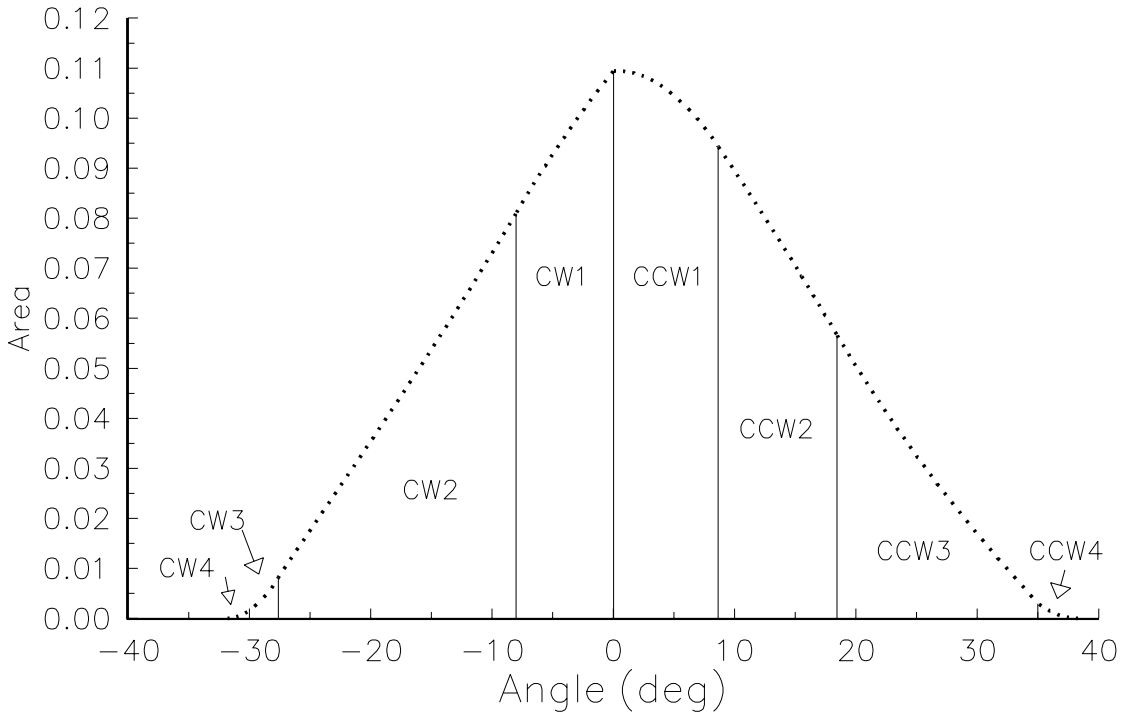
0.12
0.11
0.10
0.09
0.08
0.07
0.06
0.05
0.04
0.03
0.02
0.01
0.00
Area
CW1
CCW1
CW2
CCW2
CW3
CCW3
CW4
CCW4
−40
−30
−20
−10
0
10
20
30
40
Angle (deg)

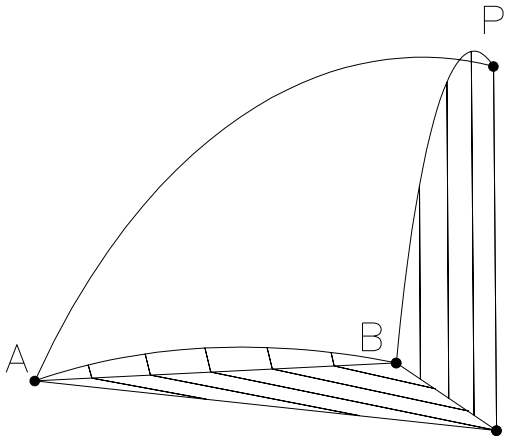
P
B
A