Thermodynamic Properties of Ammonia-Water Mixtures for Power Cycles[1]

Eva Thorin[2,3,4], Charlotte Dejfors[2], Gunnar Svedberg[2]

[1] Paper presented at the Thirteenth Symposium on Thermophysical Properties, June 22-27, 1997, Boulder, Colorado, USA

[2]Department of Chemical Engineering and Technology / Energy Processes

Royal Institute of Technology, S-100 44 Stockholm, SWEDEN

[3]Department of Energy, Mälardalens Högskola, PO Box 883,

S-721 23 Västerås, SWEDEN

[4]To whom correspondence should be addressed. (e-mail: thorin@ket.kth.se)

ABSTRACT

Power cycles with ammonia-water mixtures as working fluids have been shown to reach higher thermal efficiencies than the traditional steam turbine (Rankine) cycle with water as working fluid.

Different correlations for the thermodynamic properties of ammonia-water mixtures have been used in studies of ammonia-water mixture cycles described in literature. Four of these correlations [1, 2, 3, 4] are compared in this paper. The difference in thermal efficiencies for a bottoming Kalina cycle when these four property correlations are used are in the range 0.5-3.3%. The properties for saturated liquid and vapor according to three of the correlations [2, 3, 4] and available experimental data are also compared at high pressures and temperatures (up to 20 MPa and 337°C (610K)). The difference in saturation temperature for the different correlations is up to 20% and the difference in saturation enthalpy is as high as 100% when the pressure is 20 MPa.

KEY WORDS: ammonia-water mixture; Kalina cycle; power cycle; thermodynamic properties.

1. INTRODUCTION

In conventional power cycles, water is used as working fluid. One way to improve the thermal efficiency is to replace the one-component fluid with a binary fluid. Binary fluids boil and condense at increasing and decreasing temperatures respectively. This makes it possible to keep the temperature profile of the working fluid closer to a heat source of decreasing temperature and a heat sink of increasing temperature. The most well-known power cycle with a binary working fluid (an ammonia-water mixture) is the Kalina cycle. This cycle has been shown to be more efficient than conventional power cycles for several applications [5, 6, 7].

In calculating the performance of the power cycles, the correlations for the thermodynamic properties of the ammonia-water mixture play an important role. The aim of this study is to investigate correlations presented in literature. Different correlations used in Kalina cycle simulations have been compared. The correlations have also been compared to available experimental data.

2. AVAILABLE CORRELATIONS FOR THERMODYNAMIC PROPERTIES

About 30 correlations for the thermodynamic properties of the ammonia-water mixture found in literature are presented in Figure 1. Most of them have been developed for pressures and temperatures lower than commonly applied in power cycles. For some applications of ammonia-water cycles (direct-fired cycles) the pressure and temperature are as high as 20 MPa and 650°C (923K) respectively. The ammonia-water mixture will then be in the vicinity of or maybe even above the critical point.

Figure 1 shows the theoretical background of the different correlations. The basis of the correlations can be divided into seven groups: cubic equations of state, virial

equations of state, Gibbs excess energy, the law of corresponding states, perturbation theory, group contribution method and polynomial functions.

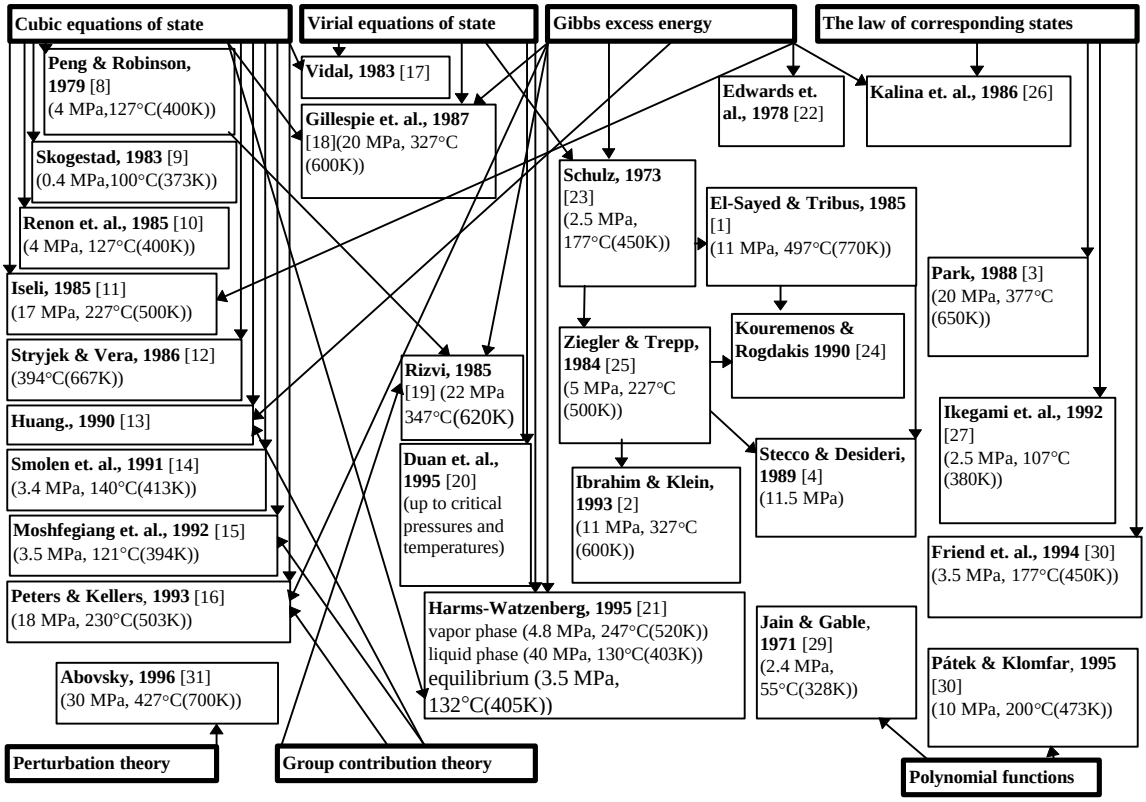

Figure1.Available correlations and their theoretical background. The numbers in brackets are the maximum pressure and temperature the correlation has been developed for.

Five of the correlations in Figure 1 [1, 2, 3, 4, 24] have been used in simulations of ammonia-water power cycles. Only the correlation by Park [3] has been developed for pressures higher than 12 MPa. This is also the only correlation using the same equations for the vapor and liquid phases. In the other correlations, different equations for the vapor and liquid phases are used. The vapor is supposed to be an ideal mixture of real gases while the properties for the liquid phase are corrected by a term calculated from the Gibbs excess energy. In this study, the correlations by El-Sayed & Tribus [1], Park [3], Stecco & Desideri [4] and Ibrahim & Klein [2] are compared. In the correlation by

El-Sayed & Tribus [1], the equations for Gibbs excess energy are taken from Schulz [23]. Stecco & Desideri [4] have made a combination of equations from Ziegler & Trepp [25] and [1]. Ibrahim & Klein [2] use the same equations as Ziegler & Trepp [25]. The constants in the function for the Gibbs excess energy have, however, been recalculated with experimental data at higher pressures and temperatures (up to 20 MPa and 316°C (589K)). The correlation by Park [3] consists of a generalized equation of state based on the law of corresponding state.

3. AVAILABLE EXPERIMENTAL DATA

Experimental ammonia-water mixture measurements have been reported since the beginning of the 20th century. Most of them have been performed at low temperatures and pressures. Table I shows studies performed at temperatures and pressures higher than the critical temperature and pressure of ammonia (132.4°C (405.5K) and 11.4 MPa respect-ively). Altogether these studies give about 250 experimental points at temperatures and pressures higher than 132.4°C and 11.4 MPa.

The experimental studies have mostly been vapor-liquid equilibrium measurements. Other properties which have been measured only in very few studies are density, critical pressure and temperature, heat of mixing and heat capacity [21, 34, 35, 36].

4. COMPARISON OF CORRELATIONS IN CYCLE SIMULATIONS

The thermal efficiencies of a Kalina cycle simulated with four different correlations for the properties of the ammonia-water mixture [1, 2, 3, 4] were compared. The configuration of the Kalina cycle used in the comparison is shown in Figure 2. It was originally presented by El-Sayed & Tribus [37]. Marston [38] has simulated this

configuration with the correlation for the ammonia-water mixture in [1]. Park & Sonntag [39] have studied the same configuration but with the correlation developed by Park [3].

Table I. Experimental studies with temperatures higher than the critical temperature and pressure of ammonia (132.4°C (405.5K) and 11.4 MPa respectively).

Author	**Year**	**Data**	**Temperature °C (K)**	**Pressure MPa**	**Mass fraction of ammonia**
Postma [33]	1920	bubble points and dew points	109-235 (382-508)	6.6-17.8	0.74-0.93
Tsiklis et. al. [34]	1965	vapor-liquid equilibria	97-350 (370-623)	0-22	0-1
Rizvi [19]	1985	vapor-liquid equilibria	33-345 (306-618)	0-22	0-1
Iseli [11]	1985	vapor-liquid equilibria	81-220 (354-493)	3.6-16.1	0.5-0.9
Gillespie et. al. [20]	1987	vapor-liquid equilibria	40-316 (313-589)	0-20	0-1
Sassen et. al. [35]	1990	bubble points dew points	16-340 (289-613) 100-180 (373-453)	1.3-21.5 0.1-9.7	0.18-0.79 0.18-0.89
Harms-Watzenberg [21]	1995	vapor-liquid equilibria liquid density vapor molar volume	35-225 (308-498) 0-140 (273-413) 0-200 (273-473)	0.3-17.0 0.8-37.6 0.8-40	0.01-1 0.01-0.9 0.24-0.74

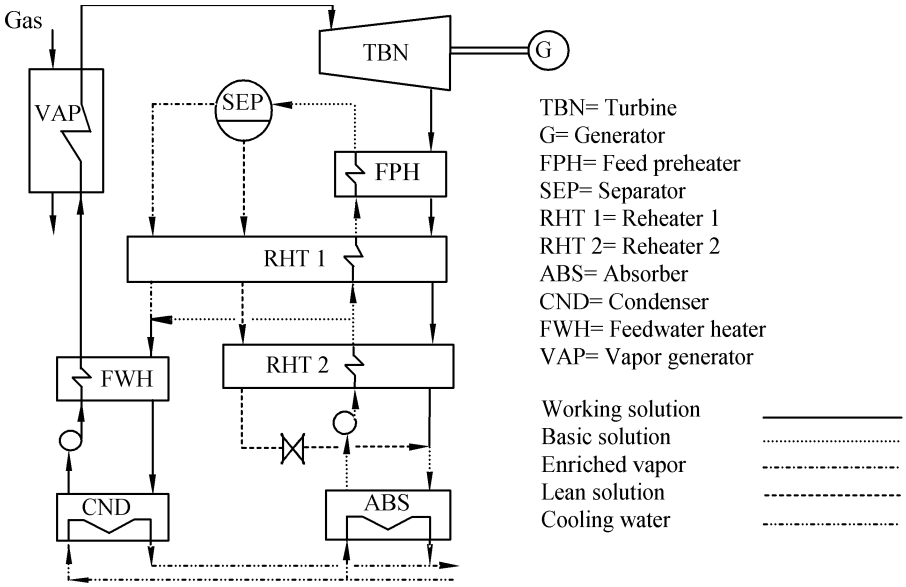

Figure 2. Kalina cycle configuration originally presented by El-Sayed & Tribus [37].

In this study, the Kalina cycle has been simulated using the correlations for the ammonia-water mixture from Stecco & Desideri [4] and Ibrahim & Klein [2]. Input data from the study of Marston [38] have been used (Table II). A comparison with two higher maximum pressures in the cycle has also been performed using the two latter correlations. The calculations using the correlations from Stecco & Desideri [4] were performed using the simulation program IPSE-pro by Simtech, while the program EES by F-Chart Software was used for the correlations from Ibrahim & Klein [2].

Table II. Parameters used in the simulations of a simple Kalina cycle (Figure 2).

Description	**Value**	**Description**	**Value**
Maximum pressure	10.8 MPa	Minimum temperature difference	
Maximum temperature of the gas	538°C(811K)	boiler outlet	28°C
Minimum temperature of the gas	71°C(344K)	boiler pinch point	13°C
Mass fraction of ammonia		condenser (CND)	3°C
stream through the boiler	0.70	absorber (ABS)	3°C
stream through the absorber	0.42	feedwater heater (FWH)	3°C
Heat capacity of gas	1.06 $kJ \cdot kg^{-1} \cdot K^{-1}$	the rest of the heat exchangers	5°C

The results of the comparisons are shown in Table III. With a maximum pressure of 10.8 MPa in the cycle, the differences in thermal efficiencies are in the range 0.5-3.3%. The correlation of Park [3] gives the highest and the correlation of Stecco & Desideri [4] the lowest efficiency. The efficiencies for the cycle with the three correlations based on almost the same theory are very close. With higher maximum pressure in the cycle the difference between the correlations is still small, even though it increases. The fit of the function for Gibbs excess energy to experimental data at higher temperatures and pressures in the correlation of Ibrahim & Klein [2] seems not to affect the efficiency of the cycle to any greater extent.

Table III. The efficiency ((Net power generation)/(Heat extracted from heat source)) of a simple Kalina cycle (Figure 2) simulated with different correlations for the properties of the ammonia-water mixture.

Maximum pressure	**Stecco & Desideri**	**Ibrahim & Klein**	**Marston**	**Park & Sonntag**
p= 10.8 MPa	0.329	0.331	0.331	0.340
p= 15.0 MPa	0.345	0.348	not calculated	not calculated
p= 20.0 MPa	0.360	0.368	not calculated	not calculated

5. COMPARISON OF SATURATION PROPERTIES

Comparison of saturation properties up to 250°C (523K) calculated with different correla-tions have been presented in literature [2, 40]. In this study, bubble point and dew point temperatures and enthalpies according to three of the correlations for properties of ammonia-water mixtures [2, 3, 4] have been compared at two different

pressures, 11 and 20 MPa respectively. The data for the correlation of Park [3] have been taken from tables in [39]. Available experimental data have been included in the comparison. A comparison of pressures and enthalpies for bubble points and dew points at temperatures from 177°C (450K) to 337°C (610K) has also been performed.

In the comparison of the correlations at fixed pressure, the highest pressure gives the largest difference in temperature and this occurs at high mass fractions of ammonia. The difference is at the most about 20% at 20 MPa and about 9% at 11 MPa. The largest difference in enthalpy is as high as 100% at 20 MPa while it is about 30% at 11 MPa. The experimental data for the liquid phase temperature follow the correlations of Stecco & Desideri [4] and Ibrahim & Klein [2] well at the lower pressure. At higher pressure, the experimental data are very few. Figure 3 and 4 show the result for 20 MPa.

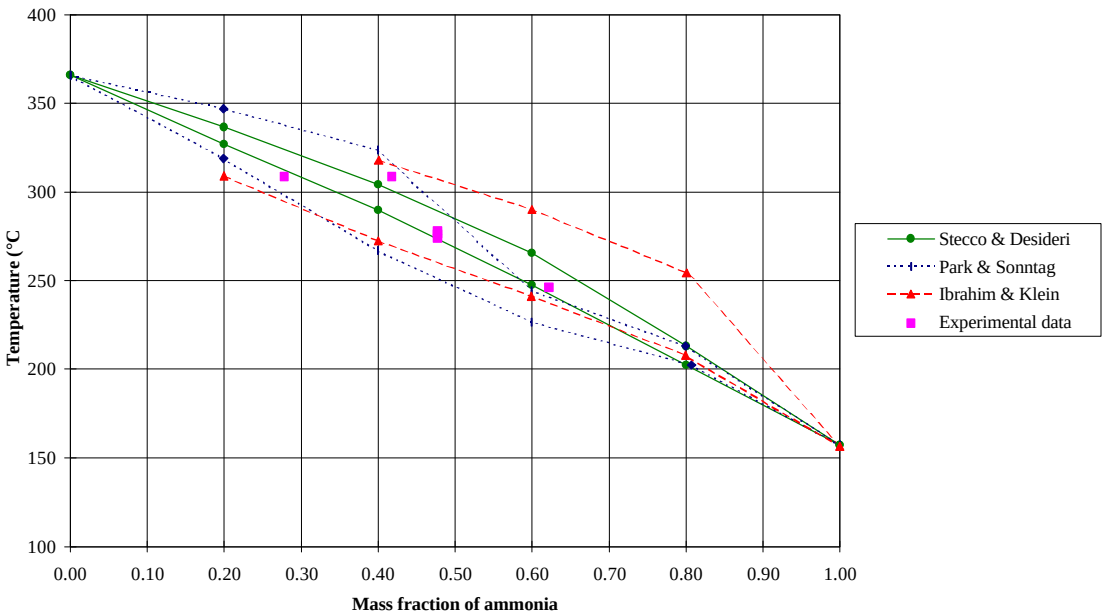

Figure 3.Temperature for bubble points and dew points at pressure 20 MPa. The experimental data are taken from [18, 19, 35].

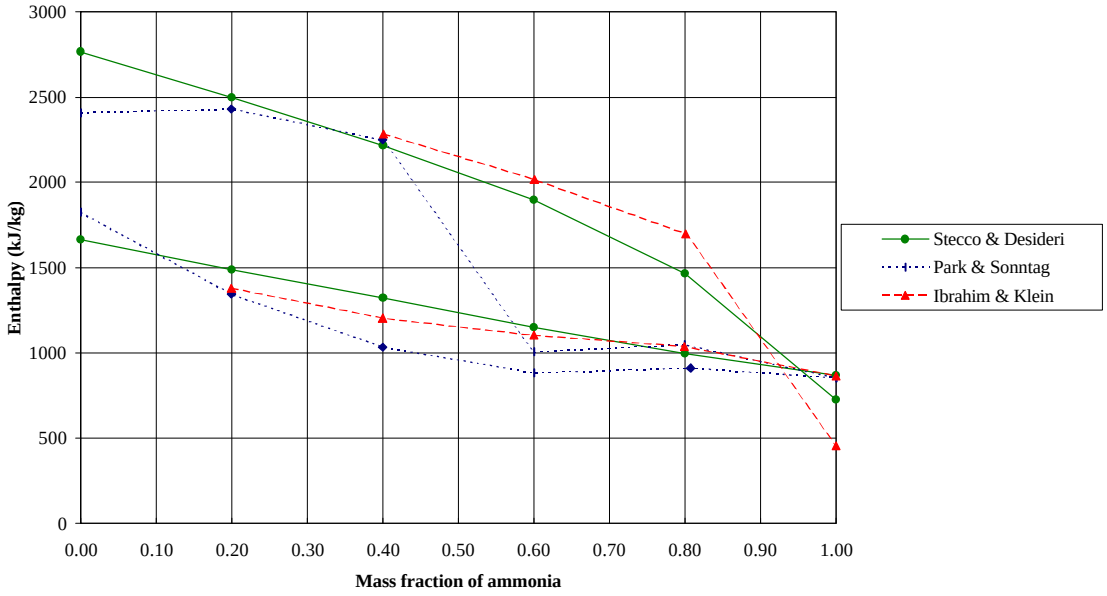

Figure 4.Enthalpy for bubble points and dew points at pressure 20 MPa.

At fixed temperature, the differences in enthalpy are much smaller than at fixed pressure and reach at the most about 15%. Figures 5 and 6 show the comparison of pressures at 177 °C and 337 °C. The correlations for the dew points follow each other well at lower mass fractions of ammonia, but at higher mass fractions the correlation of Stecco & Desideri [4] begins to deviate from the other correlations and the differences in pressure become very large. The higher the temperature the sooner the deviation begins when going from low to high mass fraction of ammonia. The differences between the correlations are mostly larger than the differences between the correlations and the experimental data.

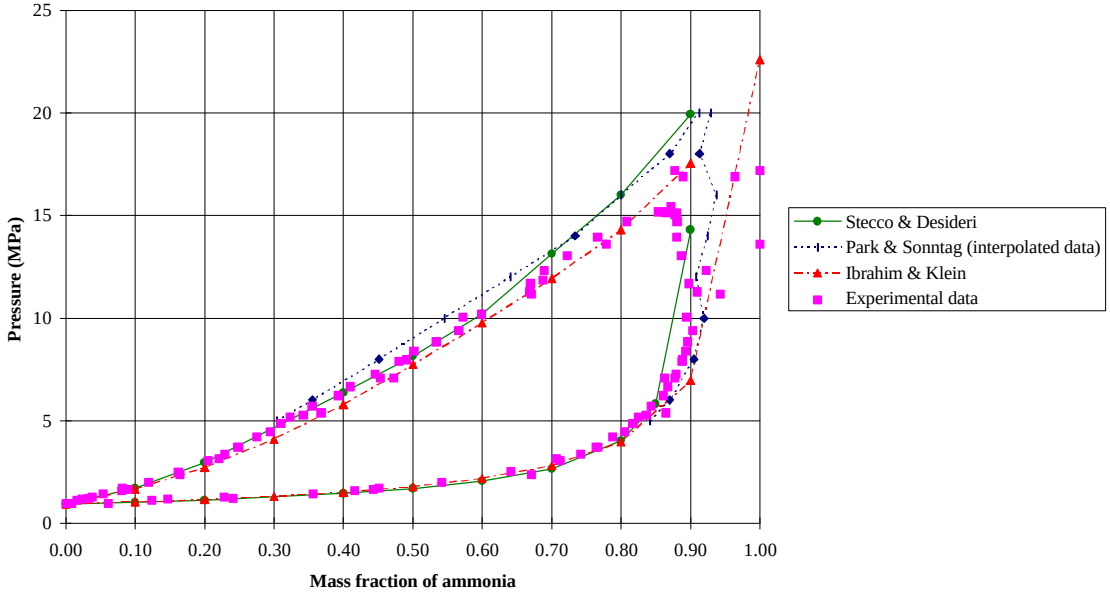

Figure 5. Pressure for bubble points and dew points at temperature 177°C (450 K). The experimental data are taken from [11, 18, 19, 21, 35].

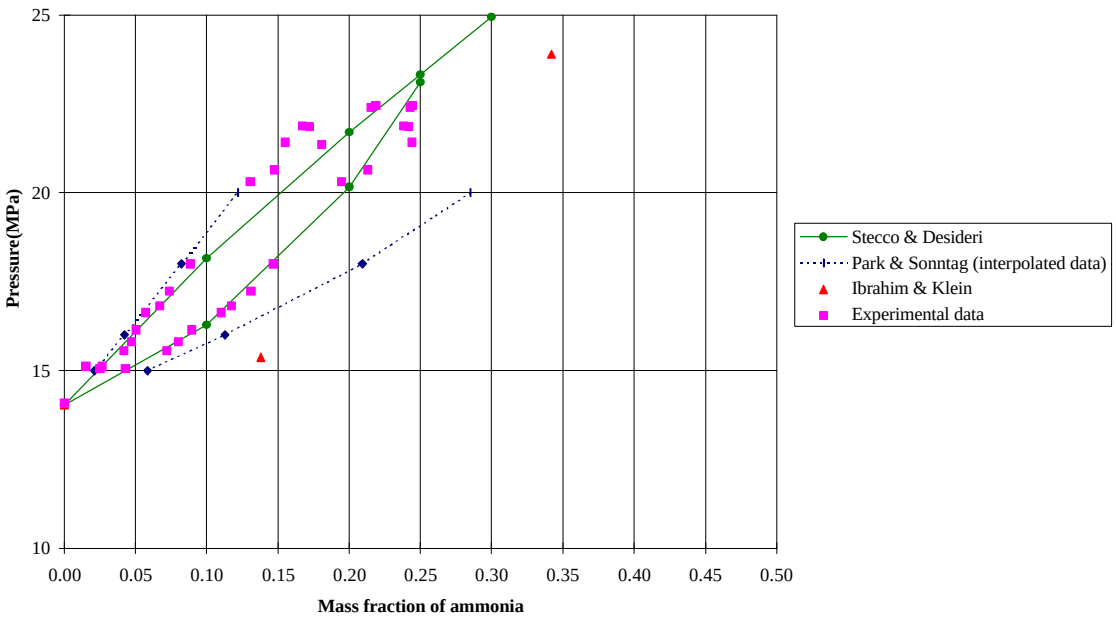

Figure 6. Pressure for bubble points and dew points at temperature 337°C (610K). The experimental data are taken from [19, 35].

6. CONCLUSIONS

Most of the correlations for the properties of ammonia-water mixtures found in the literature have been developed for lower temperatures and pressures than those common in power cycles. There are very few experimental data at high temperatures and pressures and most of them are vapor and liquid equilibrium data. To achive accurate correlations at high temperatures and pressures, more experimental data are necessary.

The correlations for the properties of ammonia-water mixtures used in simulations of power cycles have not been developed for high temperatures and pressures. When used in simulations of a simple Kalina cycle, different correlations give cycle efficiencies with a difference not higher than 0.5-3.3%. The differences in saturation properties between the correlations are, however, considerable at high pressures, high temperatures and high mass fractions of ammonia. In some power cycle applications, the pressure and temperature are as high as 20 MPa and 650°C respectively. The mixture will then be in the vicinity of or above the critical point. In order to accomplish reliable simulations of the power cycles, new correlations are desired.

ACKNOWLEDGMENT

Part of this work has been financed by the Swedish National Board for Industrial and Technical Development (NUTEK).

REFERENCES

1. El-Sayed Y. M., Tribus M., *ASME publication*, AES **1:**89 (1985)

2. Ibrahim O.M., Klein S.A, *ASHRAE Trans*., **1:**1495 (1993)

3. Park Y. M., *Ph. D. Dissertation*, The University of Michigan (1988)

4. Stecco S. S., Desideri U, *ASME paper 89-GT-149* (1989)

5. Kalina A., *ASME AES-Vol. 25/HTD-Vol.191*, 41 (1991)

6. Olsson E., Thorin E., Dejfors C., Svedberg G., *FLOWERS' 94*, Florence,Italy (1994)

7. Lazzeri L.,Diotti F.,Bruzzone M.,Scala M.,*Proc. Am. Power Conf.*, 57 **1:**370 (1995)

8. Peng D. Y., Robinsson D. B., *ACS Symp. Ser*., **133:**20 (1980)

9. Skogestad S., *Fluid Phase Equil*., **13:**179 (1983)

10. Renon H., Guillevic J. L., Richon D., Boston J., Britt H, *Int. J. Refrig*., **9:**70 (1986)

11. Iseli M., *Diss. ETH Nr 7743*, Zürich (1985)

12. Stryjek R., Vera J. H., *Can. J. Chem. Eng*., **64:**323 (1986)

13. Huang H., *Fluid Phase Equil*., **58:**93 (1990)

14. Smolen T. M., Manley D. B., Poling B. E., *J. Chem. Eng. Data*, **36:**202 (1991)

15. Moshfeghian M., Shariat A., Maddox R. N., *Fluid Phase Equil*., **80:**33 (1992)

16. Peters R., Keller J. U, *DKV-Tagungsber. 20th*, **2:**183 (1993)

17. Vidal J., *Fluid Phase Equil*., **13:**15 (1983)

18. Gillespie P. C., Wilding W. V., Wilson G. M., *AIChE Symp. Ser*., 83, **254:**97 (1987)

19. Rizvi S. S. H, *Ph. D. Dissertation*, University of Calgary, Canada (1985)

20. Duan Z., Møller N., Weare J. H., *J. Sol. Chem*., 25, **1:**43 (1996)

21. Harms-Watzenberg F., *VDI Fort.Ber., Reihe 3*, Düsseldorf, VDI-Verlag (1995)

22. Edward T. J., Newman J., Prausnitz J. M., *Ind. Eng. Chem. Fundam.*, 17, **4:**264 (1978)

23. Schulz, S. C. G., *Int. Cong. Refrig. Proc.*, **2:**431 (1973)

24. Kouremenos D. A., Rogdakis E. D., *ASME publication*, AES **19:**13 (1990)

25. Ziegler B., Trepp Ch., *Int. J. Refrig.*, 7, **2:**101 (1984)

26. Kalina A., Tribus M., El-Sayed Y., *ASME paper 86-WA/HT-54* (1986)

27. Ikegami Y., Nishida T., Uto M., Uehara H., *13th Japan Symp. Thermophys. Prop.*, 213 (1992)

28. Friend D.G, Olson A.L, Nowarski A., *Proceedings of the 12th International Conference on the Properties of Water and Steam*, Orlando, FL, Sep.11-16 (1994)

29. Jain P. C., Gable G. K., *ASHRAE Trans.*, **77:**149 (1971)

30. Paték J., Klomfar J., *Int. J. Refrig.*, 18, **4:**228 (1995)

31. Abovsky V., *Fluid Phase Equil.*, **116:**170 (1996)

32. Postma S., Rec. Trav. Chim., **39**:515 (1920)

33. Tsiklis D. S., Linshits L. R., Goryunova N. P, Russ. *J. Phys. Chem.*, 39, **12:**1590 (1965)

34. Jennings B. H., *Proc. Int. Cong. Refrig.* 12, **2**:329 (1967)

35. Sassen C. L., van Kwartel R. A. C., van der Kooi H. J., de Swaan Arons J, *J. Chem. Eng. Data*, **35:**140 (1990)

36. Macriss R. A., Eakin B. E., Ellington R. T., Huebler J., *IGT Research Bulletin No34* (1964)

37. El-Sayed Y. M., Tribus M, *ASME publication*, AES **1:**97 (1985)

38. Marston C. H., *J. Eng. for Gas Turbines and Power*, **112:**107 (1990)

39. Park Y.M., Sonntag R. E., *Int. J. Ener. Res*., **14:**153 (1990)

40. Yoshizwa N., Uematsu M., *Netsu Bussei*, 6, **4:**240 (1992)