A PULSE PHASE-SENSITIVE TECHNIQUE OF ACOUSTICAL MEASUREMENTS

D.I. Arnold[1], E.V. Grodzinskii[1], V.F. Kozhevnikov[2*], and S.P. Naurzakov[1]

[1] RRC "Kurchatov Institute", 123182 Moscow, Russia
[2] Moscow Aviation Institute, 125871 Moscow, Russia

ABSTRACT. An original technique for precise measurements of sound velocity in liquids and gases is described. The technique provides obtaining precise sound velocity data with a sample of small length (about 1-2 mm) and high acoustical attenuation. Measurements of sound propagation time t through the sample available in an "absolute" mode, where the absolute value t is measured with uncertainty T (T is a period of sound oscillations) *and* in a "relative" mode, where the difference Δt of sound propagation time with respect to a reference point is measured with uncertainty $10^{-2}T$. The technique also allows estimating sound attenuation and studying frequency dependence of the acoustical properties. The technique has been applied to researches of fluid metals near the liquid-gas critical point.

KEY WORDS: experimental method, sound velocity, acoustical attenuation.

1. INTRODUCTION

A well known power of Physical Acoustics for matter properties studies as well as for device applications caused an appearance of a large amount of techniques and standard apparatuses that can be used for investigations of sound velocity in liquids and gases [1].

[*] Corresponding author. Temporary address: 361 Hampton Ave., Salt Lake City, Utah 84111, U.S.A.; e-mail: Vkozhev@aol.com

The sound velocity data U provide direct information on one of susceptibilities, namely adiabatic compressibility β_s " $\rho^{-1}(\partial\rho/\partial P)_s = (\rho U^2)^{-1}$, where ρ is mass density and P is pressure, which , in particular, can be used for getting caloric equation of state at temperatures and pressures not available for direct heat capacity measurements (see [2], for example). It is principally important that the modern techniques allow measuring sound velocity with the best accuracy available for thermal properties (for instance, the most precise value of the universal gas constant has been found from sound velocity data [3]).

A pulse phase-sensitive (PPS) technique, described below, has been developed for measurement of sound velocity in liquid metals at high temperatures (~ 2000 K) and high pressures (~ 2000 bar) [4]. The main difficulties of such measurements are well known. They are caused by small sample sizes, use of buffer rods, large sound attenuation in the sample and the buffer rods, and so on. It was found that standard precise phase- and multi-echo techniques used for similar studies work well either at high temperature but at low pressure, or at high pressure but at low temperature (see [5], for example). The only method which allowed the measurements at both high temperatures and high pressures was a pulse transmission/echo “buffer” technique [1], which deals with the first (i.e. the biggest) transmitted and reflected signals, but the accuracy available for standard variants of this technique was rather moderate. Such a technique was used by Suzuki *et al.* [6] in the pioneer high temperature-high pressure study of sound velocity in mercury. The PPS technique combines the advantage of this technique with the high accuracy typical for phase methods [1,5].

Simultaneously with precise sound velocity measurements, the PPS technique permits obtaining data on sound attenuation versus temperature, pressure and frequency.

2. THE TECHNIQUE

A principal scheme of the measuring cell is shown in Fig.1. The sample space is a gap between two buffer rods. *L* is the length of the sample.

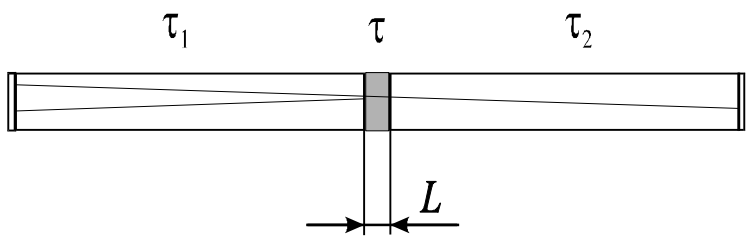

Fig.1. Schematic of the cell.

SOUND VELOCITY

An ultrasonic probe pulse is introduced into the sample through relatively long (180 mm length and 10 mm diameter) buffer rods in order to provide a cold (≤ 200 °C) temperature at the outside ends of the rods where piezoelectric traducers ($LiNbO_3$) are attached via unpolymerized epoxy resin. The sound propagation times in the buffer rods t_1 and t_2 are unknown, but they can be eliminated provided that the measurements are carried out twice: applying the probe pulse to one and then to another transducer for every experimental point.

When the radio frequency probe pulse is applied to the first transducer, the time delay Δt_1 between the sound pulse transmitted to the second transducer and the echo pulse reflected in the first rod against the rod/sample boundary is measured:

$$\Delta t_1 = \tau_1 + \tau + \tau_2 - 2\tau_1. \qquad (1)$$

Then, applying the probe pulse to the second transducer, Δt_2 is measured:

$$\Delta t_2 = \tau_2 + \tau + \tau_1 - 2\tau_2. \qquad (2)$$

Hence the sound propagation time through the sample equals

$$\tau = (\Delta t_1 + \Delta t_2)/2, \qquad (3)$$

and U is calculated as usual:

$$U = L/\tau. \qquad (4)$$

Note, that in the technique an investigator deals with the “clear” parts of the first transmitted and reflected sound pulses (provided the sample is uniform), i.e. with those parts where interferences with the pulses reflected against the sample boundaries are absent.

The delays Δt are measured using a calibrated high-precise pulse delay generator by achieving the coincidence of phases of analogous periods of the transmitted and echo pulses on the oscilloscope screen. An accuracy of the time delay generator is 0.1 ns. A two-channel one-beam oscilloscope is used in the “alternate” mode.

An electronic part of the set-up was realized in a number of variants (with one [4] or two [7] high-precise delay generators); block and time diagrams of the latest variant are shown in Fig.2. A home-made synchronizer-commutator is a principal part of these apparatuses. At the output of the synchronizer- commutator we get a succession of pairs of

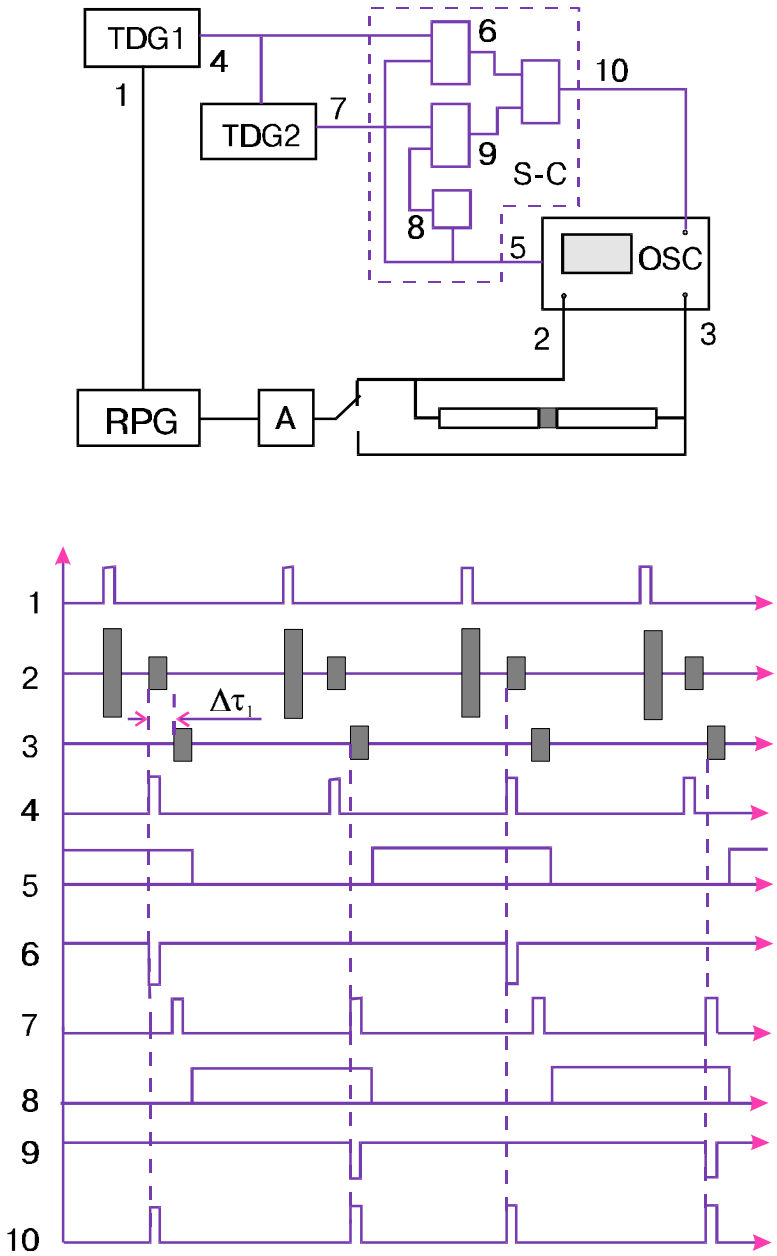

Fig.2. Block and time diagrams of the electronic-acoustic part of the apparatus.
TDG1 and TDG2, high-precise time delay generators; RPG, generator of the coherent rf pulses; A, amplifier; OSC, oscilloscope; S-C, synchronizer-commutator.
1, the basic sync pulses starting up the generator of the coherent radio-pulses; 2, the probe and reflected pulses at the transducer attached to the first rod; 3, the transmitted pulses at the second transducer; 4, the sync pulses of the reflected signal delayed for $2t_1$ relative to the basic sync pulses (1); 5, gate pulses which trigger the channels of the oscilloscope in the “alternate” mode; 6, pulses formed by a NAND element of the synchronizer-commutator; 7, sync pulses delayed for Dt_1 relative to the synch pulses of the reflected signal (4); 8, reversed gate pulses of the oscilloscope sweep (5); 9, pulses formed by another NAND element of the synchronizer-commutator; 10, the succession of the synch pulses pairs formed by the synchronizer-commutator.

sync pulses monitoring the sweep of the oscilloscope beam. The sync pulses in each pair can be shifted relative one another by varying the delay of the time delay generator. Correspondingly the sweep onset of the transmitted signal can be shifted relative to the onset of the reflected signal, thus one can achieve the coincidence of the signals on the oscilloscope screen.

A generator of rf pulses works in a coherent regime. Amplitude of the probe pulse at the output of the amplifier equals about 150 V; amplitude of the reflected signals at room temperature for molybdenum cell equals 5-8 V. The duration of the probe pulse can be changed; we work with the pulses of 3-4 mks duration at frequency n = 10 MHz, that is every probe pulse consists of 30-40 periods of high frequency oscillations. Such a duration allows the sound wave to reach a steady-state amplitude, but it is short enough to prevent overlapping of the pulses reflected in the sample and in the buffer rods. On the other hand a frequency band of the sound oscillations at such a duration probe pulse is narrow enough to state that we measure the *phase* velocity of sound. Thus, the technique provides possibility of a frequency dependence study of acoustical properties by changing the resonance frequency of the transducers and rf generator.

The choice of the probe pulses repetition rate is determined by the time of the complete die-out of echo pulses in the buffer rods. In our experiments the frequency of repetition is about 1 kHz. So, the measurements are possible only at steady state conditions; the appearance of any instabilities in the sample with characteristic times < 1 s (convection flows, for example) leads to smearing of the picture on the oscilloscope screen.

The equation (4) relates to the measurement of absolute value of sound velocity. In the “absolute” mode the error in the coincidence of the pulses on the oscilloscope screen is determined by the front of the radio pulses, that takes a number (about ten in our case) of rf oscillations. In this mode the pulses are superposed, first, on their fronts, and then the achieved coincidence is corrected on the phases of the rf oscillations in the middle part of the pulses (on about 15th period), where magnitude of the oscillations is maximum and constant. In fact the uncertainty of the t measurements in the absolute mode is 1 period.

Much more accurate data are available for the “relative” mode where the *variation* of the propagation time $\Delta t = t - t_r$ is measured with respect to a *reference* point, where sound velocity is known from a special experiment or from reliable literature data; t_r is a value (3) measured in the reference point. In this mode the coincidence is performed at about the 15th period, and uncertainty of the Δt measurements is $10^{-2}T$, where T is period of the rf oscillations (1 ns at ν = 10 MHz). In contrast to the absolute mode, in the relative mode the operator must not lose the chosen period on the oscilloscope screen; it is available with a graduate variation in the sound propagation time (i.e. at a graduate variation of sound velocity) within 2-3 periods. In complicated regions the time variation between neighboring experimental points does not exceed 1 period.

Sound velocity in the relative mode is calculated from the following formula:

$$U = L/(t_r^0 + \Delta t) \equiv L_0\,[1 + \alpha\,(t-20)]/(d + t), \qquad (5)$$

where L_0, sample length at room ($20\ ^\circ C$) temperature; α, a thermal expansion coefficient of the cell material; t, temperature of the sample, $^\circ C$; $d = t_r^0 - t_r$, a constant including

corrections associated with the error of the pulses coincidence in the reference point and delays in the electric circuits, $t_r^0 = L_r/U_r$, wherein L_r is sample length at the temperature of the reference point, and U_r is speed of sound at the reference point (known from the independent sources). Obviously, for correct calculations of the sample thermal expansion, the main details of the cell (the cell body and the buffer rods) *must* be made from identical material.

The transition from one measurement mode to another is very easy, just by triggering the multiplier of the oscilloscope sweep scale (from "× 0.1" for the relative mode to "× 1.0" for the absolute mode).

Thus, in principle, the PPS technique does not differ from the traditional pulse transmission/echo technique, but the use of high frequency oscillations phases provides an accuracy typical for phase techniques.

The relative error of the SV data can be estimated from the formula [2b]:

$$dU \approx \{[dU_r\,(1 + \Delta t/t_r)^{-1}]^2 + (dt)^2 + [dL_0\,(1 + t_r/\Delta t)^{-1}]^2\}^{1/2}, \qquad (6)$$

where dU_r, an error of the literature data; $dt = D(\Delta t)/(t_r + \Delta t) = D(\Delta t)/t$, a relative error of the time measurements [$D(\Delta t)$ is absolute error of the Δt - measurements (1 ns)]; dL_0, relative error of measurement of the gap between the buffer rods at room temperature. It is easy to see, that error dt for the samples with $L \sim 1$ mm at high temperatures is of order 10^{-4}, i.e. much smaller than ordinary errors of dU_r (~ 10^{-3}) and dL_0 (also ~ 10^{-3}). So, the error dU at low temperatures (not far from the reference point) is determined by an error of the U-data in the reference point, whereas at high temperatures - by the error dL_0. Note

that to prevent the appearance of parasite signals (this is especially important in the regions of high sound attenuation) we do not use the spacer between the buffer rods [8-11].

The process of SV-measurements is automated: monitoring the time delay generator, recording of the original readings (times of delays, and termo-EMF of the thermocouples), as well as treating of the original data obtained are performed via computer with specially developed hard- and software. However it should be pointed out, that the principal operation, namely superposition of the rf pulses on the oscilloscope screen, is performed by the person.

SOUND ATTENUATION

Dealing with the phase variation of the definite periods of the reflected and transmitted signals, the operator can simultaneously follow the amplitude of these signals which contain information about sound attenuation.

If the amplitude of the probe signal is A_0, the amplitudes of the signals reflected in the first (A_1) and in the second (A_2) buffer rods, and transmitted through the cell (A_t) can be written:

$$A_t = K_t A_0 t_1 T_{1S} t_s T_{S2} t_2$$

$$A_1 = K_1 A_0 t_1^2 R_{1S} \qquad (7)$$

$$A_2 = K_2 A_0 t_2^2 R_{2S},$$

where t_s, t_1, t_2, correspondent attenuation of the sound waves in the sample, first and second buffer rods; T_{1S} and T_{S2}, acoustical transmission coefficients from the first and second rod to the sample, respectively; R_{1S} and R_{2S}, correspondent acoustical reflection coefficients. The

transmission and reflection coefficients are determined by the acoustical impedances of the sample and buffer rods, and can be calculated from the known formulas [13]. Coefficients K_t, K_1 and K_2 depend on geometrical factor (non parallelism of the plane surfaces of the rods, non planed character of the sound waves, *etc*.), losses in the buffer-rod/transducer boundaries, and others. Note, that these coefficients also depend on temperature, pressure and frequency that make difficulties in estimation of the accuracy of the data on sound attenuation, permitting however to get valuable qualitative information about the variation of this characteristic.

Thus, sound attenuation t_s can be written as follows: :

$$t_s = K A_t (R_{1S} R_{2S})^{1/2} (T_{1S} T_{S2})^{-1} (A_1 A_2)^{-1/2}, \qquad (8)$$

where K is a combination of K_t, K_1 and K_2.

Coefficient of sound attenuation a_s can be found then from the definition:

$$a_s = - \ln t_s / L. \qquad (9)$$

One can expect that for uniform and short samples ($L/D \ll 1$, D is diameter) the value of sound attenuation is determined mainly by sound absorption (see also [12]).

Note, that in spite of the mentioned difficulties, the data of the amplitude measurements played a crucial role in the interpretation of the acoustical anomalies in mercury [10, 11], and provided the most accurate estimation of the critical parameters of this metal [9].

3. CONCLUSIONS

A pulse phase-sensitive technique combines advantages of the classical echo-pulse and phase methods of sound velocity measurements in liquid and gases, allowing precise data to be obtained for sample of a short length (about 1 mm) and with a large sound attenuation.

The use of rather long probe pulses (i.e. carrying out the measurements at a narrow frequency band) provides the measurements of the *phase* velocity of sound and so the possibility of a frequency dependence study of the acoustical properties.

Simultaneously the technique allows estimating sound attenuation.

The technique has been successfully applied to measurements of sound velocity in liquid cesium that allowed the detailed experimental tables for all the bulk thermodynamic properties of this metal from the melting to the critical point to be compiled [2]; acoustical studies of mercury performed with this technique resulted in discovering a prewetting phase transition in the dense mercury vapor [10] and the most accurate estimation of the critical parameters [9]. A phase diagram of mercury retrieved on the bases of the acoustical measurements performed with this technique costs a new light on various features seen in earlier experiments on mercury both in the vapor phase and near-critical region, some of them have been first noticed over quarter of century ago [11].

In this paper we did not describe the cell construction and other details of the set-up used in the experiments with this technique. Nevertheless they were very important for success of these experiments; they are described in Refs. [8a, 9].

An application of the technique to the studies of critical phenomena in simple and complex liquids as well as continuation of the studies of expanded metals promises to bring new interesting results.

ACKNOWLEDGMENTS

We are grateful to colleagues from Molecular Physics Institute of Russian Research Centre “Kurchatov Institute” for many-year help in our experiments on expanded metals. We are especially thankful to A.A. Borzhievskii and N.A. Naumenko which help in the automation of the set-up was crucial. We appreciate very much interest and discussions with J.M.H. Levelt Sengers, K. Kikoin, K. Tamura, and V. Vaks.

We acknowledge support from Russian State High School Committee and Russian Basic Research Foundation (via Grant No 94-0-03656).

REFERENCES

1. H.J. McSkimin, in Physical Acoustics. Principles and Methods., Ed. by W.P. Mason, v.I, part A, pp. 217- 332, Academic Press, New York and London, 1964
2. (a) V.F. Kozhevnikov, Zh. Eksp. Teor. Fiz. 97 (1989) 541-558 [transl.: Sov. Phys. JETP 70 (1990) 298-310]; (b)V.F. Kozhevnikov, S.P. Naurzakov and A.P. Senchenkov, J. Moscow Phys. Soc 1 (1991) 171-197.
3. M.R. Moldover, J.P.M. Trusler, T.J. Edvards, J.B. Mehl and R.S. Davis, Journal of Research of the National Bureau of Standards 93 (1988) 85-144.

4. D.I. Arnold, A.M. Gordeenko, P.N. Ermilov, V.F. Kozhevnikov, and S.P. Naurzakov, Prib. Tekhn. Eksp. No. 5 (1985) 1670170 [tranls.: Instruments and Experimental Techniques 28 (1985) 1173-1177]
5. M. B. Gitis and I.G. Mikhailov, Akust. Zh. 12 (1966) 17-25, in Russian; G.M.B. Webber and R.WB. Stephens, in Physical Acoustics. Principles and Methods., Ed. by W.P. Mason, v.IV, part B, pp. 53-84, Academic Press, New York and London, 1968; I.I. Novikov, V.V. Roshupkin, Yu.S. Trelin *et al.* Surveys on Thermophysical Properties of Matter, Issue 6 (32), High Temperature Institute, Moscow, 1981, in Russian.
6. K. Suzuki, M. Inutake, and S. Fujiwaka, IPPJ-310, Institute of Plasma Physics, Nagoya (1977);. M. Inutake, K. Suzuki and S. Fujiwaka, J. Phys. (Paris) 40 (1979) C7-685-686
7. N.B. Vargaftik, V.F. Kozhevnikov, A.M. Gordeenko, D.I. Arnold and S.P. Naurzakov, Int. J. Thermophysics 7 (1986) 821-828.
8. (a) V.F. Kozhevnikov, S.P. Naurzakov and D.I. Arnold, J. Moscow Phys. Soc. 3 (1993) 191-201; (b) V.F. Kozhevnikov, D.I. Arnold and S.P. Naurzakov, J. Phys.: Condens. Matter, 6 (1994) A249-A254.
9. V.F. Kozhevnikov, D.I. Arnold and S.P. Naurzakov, Fluid Phase Equilibria 125 (1996) 149-157
10. V.F. Kozhevnikov, D.I. Arnold, S.P. Naurzakov and E.M. Fisher, Phys. Rev. Lett. 78 (1997) 1735-1738.
11. V.F.Kozhevnikov, D.I.Arnold, S.P. Naurzakov and E.M. Fisher, This Proceedings.

12. M. Yao, K. Okada, T. Aoli and H. Endo, J. Non-Crystall. Solids 205-207 (1996) 274-277.

13. L.D. Landau and E.M. Lifshitz, Hydrodynamics, Nauka, Moscow, 1986.