ALL-DIELECTRIC MICROMACHINED CALORIMETER FOR HIGH-RESOLUTION MICROWAVE POWER MEASUREMENT[a)]

Albrecht Jander, John Moreland, and Pavel Kabos

National Institute of Standards and Technology
Boulder, Colorado 80305, USA
Phone: (303) 497-3641, Fax: (303) 497-3725, E-mail: moreland@boulder.nist.gov

Abstract: We have developed a micromachined bimaterial cantilever with a thin-film ferromagnetic resonance (FMR) sensor to probe rf fields near microwave devices. A patterned permalloy film deposited at the tip of the cantilever serves as the localized FMR probe. Power absorption at the tip, under FMR conditions, results in a proportional bending of the bimaterial cantilever. The deflection of the cantilever is measured with an optical lever. The small dimensions of the probe (20 μm × 20μm × 0.05μm) allows for measurements of rf magnetic fields near microwave devices with 20 μm resolution and minimal intrusion. The sensor is constructed of low-stress silicon nitride and low-temperature-deposited silicon oxide. The use of dielectric materials in the cantilever beam minimizes the background signal produced by eddy-current heating of the cantilever. Using this scanning FMR probe we have measured vector-component-resolved microwave field distributions near a 500 μm wide stipline resonator driven at 9.15 GHz

INTRODUCTION

We present here a non-contact, minimally invtrusive probe for microwave circuits. The probe is fabricated using surface and bulk micromachining techniques. The approach is similar to that of Wharton and Rodrique [1] who employed ferromagnetic resonance (FMR) of a 0.4 mm diameter yttrium-iron-garnet sphere to probe microwave fields near a stripline. In that experiment, power absorption was inferred from a change in the losses of the stripline. In contrast, the calorimeter detector described here measures the absorption in the probe directly, eliminating the need to tap into the circuit. In addition, the smaller volume of the micromachined calorimeter probe results in minimal perturbation of the device under test and significantly improves spatial resolution.

In previous papers, we reported on the basic principles for detection of FMR with a micromechanical calorimeter [2,3]. The sensor in that study was based on a silicon cantilever coated with a metal film. The very tip of the cantilever was coated with the permalloy probe. Absorption of microwave energy in the probe is maximized when the microwave frequency matches the FMR condition determined by an externally applied dc magnetic bias field. The resonant frequency can be adjusted by changing the bias field, while different orientations of the bias field can be used to sense different components of the microwave field. Since the absorbed power is proportional to the local microwave intensity, this sensor can be used as a microscopic scanning microwave power meter.

In this paper we describe modifications to our original sensor design specifically intended for scanning probe experiments on active microwave circuits. In particular, we discuss a cantilever sensor constructed of low-pressure chemical vapor deposited (LPCVD) silicon nitride and silicon oxide films that together form a freestanding bilayer cantilever (see Fig. 1). The use of dielectric materials greatly reduces the background signal produced by eddy-current heating of the cantilever compared to the previous metal-coated Si design [2]. The sensor will be useful for non-intrusive probing of high frequency circuits. One may also consider this system for frequency selective microwave powered actuators for switches or filters.

[a)] Contribution of the National Institute of Standards and Technology, not subject to copyright

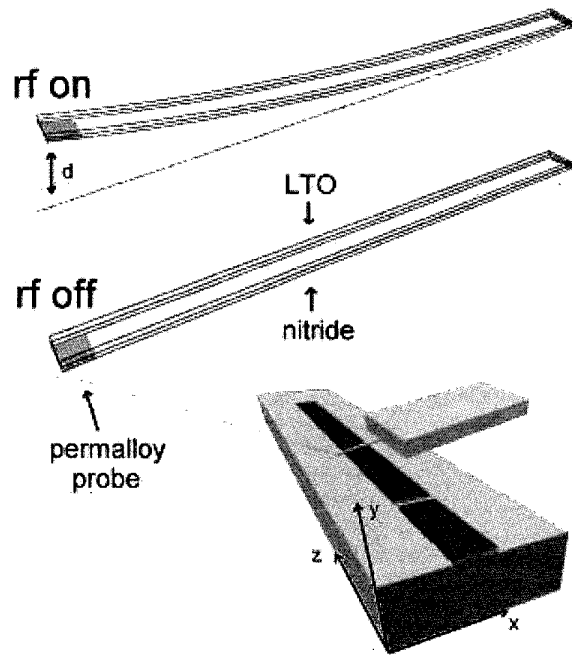

Fig.1. Calorimeter sensor constructed of silicon nitride and silicon oxide films that together form a freestanding bilayer cantilever. The cantilever is shown in close proximity to an end-coupled microstrip resonator.

EXPERIMENTAL

A. Bimaterial calorimetry.

Consider a rectangular beam fixed at one end comprised of two layers that have different thermal properties. The deflection of the beam can be estimated by solving the heat equation for this configuration [4,5]. The temperature increases linearly along the cantilever in the case that FMR power absorption P_{FMR} occurs at its tip. If we assume that the thicknesses of the cantilever layers are the same then the average temperature of the cantilever is

$$\Delta T \approx \frac{l}{2wt(\lambda_1 + \lambda_2)} P_{FMR}, \qquad (1)$$

where l, w, t, *and* λ are the length, width, thickness, and thermal conductivity of the cantilever respectively (subscripts refer to the dissimilar parameters of the layers). The displacement of the end of the cantilever will then be

$$d \approx \frac{1}{4}\frac{l^3}{t^2 w}\left(\frac{\gamma_1 - \gamma_2}{\lambda_1 + \lambda_2}\right) P_{FMR}. \qquad (2)$$

where γ_1 - γ_2 is the differential thermal expansion coefficient of the beam layers assuming that the Young's moduli E of the materials are roughly the same.

The thermal time constant for the cantilever can be estimated as the ratio of the thermal mass divided by the thermal conductivity

$$\tau_{therm} = \frac{l^2 \rho}{2}\left(\frac{C_1 + C_2}{\lambda_1 + \lambda_2}\right). \qquad (3)$$

Here, ρ is the density and C is the heat capacity of each of the beam layers.

B. FMR absorption.

The sharp FMR absorption of the ferromagnetic probe tip is used to measure the microwave intensity at the probe with frequency selectivity. Absorption of microwave energy in the probe is maximized when the Kittel ferromagnetic resonance condition, $\omega = \gamma H_0 \sqrt{1 + M_S / H_O}$ is met [6]. Here $\omega = 2\pi f_{mag}$ is the microwave frequency, H_0 is a bias field produced by an external electromagnet, M_S is the probe magnetization, and γ is the gyromagnetic constant (2.31 x 10^8 rad/s · $(\text{kA/m})^{-1}$). Only microwave magnetic fields orthogonal to the bias field can induce FMR. The microwave field can have a component h_{ip} in the plane of the thin-film probe and a component h_{op} out-of plane ($\boldsymbol{H_{rf}} = \boldsymbol{h_{ip}} + \boldsymbol{h_{op}}$).

For the case of in-plane fields, we have previously derived [7] the power absorbtion from the Landau-Lifshitz-Gilbert equation [8] describing the spin dynamics of a ferromagnet. We showed that the microwave power absorbed at resonance is $P_{FMR} = \mu_0 \omega V_{mag} \chi''_{ip} h_{ip}^2$ where μ_0 = 4π x 10^{-7} H/m is the permeability of free space, V_{mag} is the volume of the permalloy probe, h_{ip} is

the amplitude of the in-plane component of the microwave field and

$$\chi''_{ip} = \frac{M_S}{\alpha}\frac{\gamma}{\omega}\left(\frac{M_S + H_0}{M_S + 2H_0}\right) \qquad (3)$$

is the immaginary part of the in-plane susceptibility. α is the phenemenological Gilbert damping constant for spin decay.

The strong shape anisotropy of the thin-film probe suppresses the motion of the magnetization out of the film plane. This results in a FMR precession which is elliptical and a reduced susceptiblity to out-of-plane fields:

$$\chi''_{op} = \chi''_{ip}/(1 + M_S / H_0). \qquad (4)$$

For *linearly polarized* microwave excitation, the total power absorbed is the sum of independent contributions from the x and y components scaled by the ellipticity of the precession:

$$\begin{aligned} P_{total} &= \mu_0 \omega V_{mag}\left[\chi'_{ip} h_{ip}^2 + \chi''_{op} h_{op}^2\right] \\ &= \frac{\mu_0 V_{mag} M_S \gamma}{2\alpha(M_S + 2H_0)}\left[(M_S + H_0)h_{ip}^2 + H_0 h_{op}^2\right] \end{aligned} \qquad (5)$$

If other than linear polarization is to be considered, the contributions of the in-plane and out-of-plane components can not be simply summed. In that case, the microwave field can be expressed as superposition of elliptically polarized components of the form $h_{op} = \pm\sqrt{1 + M_S / H_0}\, h_{ip}$, of which only the Larmor component, circulating clockwise about the bias field, is sensed.

Figure 2 shows the field orientations and the probe configuration studied in this paper. The cantilever probe is positioned about 50 μm above the center of a microstrip resonator. The resonant frequency of the resonator is 9.15 GHz. The resonator was made from a commercially available 0.635 mm thick epoxy-ceramic composite with a 20 μm thick copper cladding on both sides. The substrate material has a dielectric constant of 9.7 and a loss tangent of

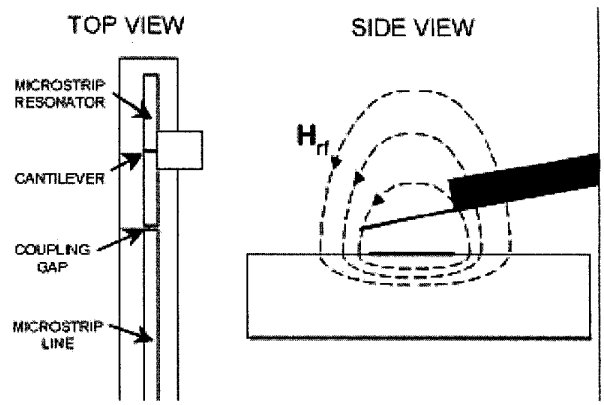

Fig. 2. Top view and side view of the experimental configuration for FMR calorimetry with a bimaterial sensor.

0.003 at 10 GHz, as specified by the manufacturer. The copper cladding was patterned with photolithography and subsequently etched in an $FeCl_2$ solution to form a microstrip resonator 0.5 mm wide and 6 mm long. Microwaves are coupled into the resonator through a 30 μm gap from an adjacent microstripline. The cantilever and the resonator are mounted on the kinematic stage of a commercially available AFM. The AFM head is, in turn, mounted in a precision electromagnet capable of applying bias fields to 1.2 T. The magnetic film sample is saturated by the bias field $\boldsymbol{H_0}$ and is oriented in the plane of the film either parallel to or transverse to the long axis of the cantilever. The microwave field is not constant throughout the sample, changing direction and magnitude as a function of position along the film, as shown in the figure.

A summary of the parameters described above for the cantilevers used in this work are shown in Table I. The spring constant and resonant frequency of the cantilever [9] $k_s = wt^3E/4l^3$ and $f_{cant} = \sqrt{k_s/0.24m_c}$, respectively, are included in the table for discussion purposes. The parameters are evaluated at H_1 = 80 A/m (1 Oe) to simplify scaling. Barnes, etal. offer a discussion of the ultimate sensitivity, which is limited by thermal excitation of the cantilever [4]. They have demonstrated femtowatt sensitivity with a bimaterial cantilever sensor. Given the thermal

Table I. Cantilever parameters assuming H_{ip} = 1 Oe at 9.15 GHz.

par	value	par	value
l	1000 μm	V_{mag}	2×10^{-17} m^3
w	20 μm	H_0	88 kA/m
t	250 nm	H_{ip}	1 Oe (80 A/m)
λ_1	1.4 W/mK	f_{mag}	9.15 GHz
λ_2	15 W/m·K	P_{FMR}	2.2 μW
ρ	2×10^3 kg/m^3	ΔT	15 K
C_1	100 J/kg·K	d	79 μm
C_2	17 J/kg·K	k_s	1.9×10^{-7} N/m
γ_1	0.50×10^{-6}/K	f_{cant}	200 Hz
γ_2	3.2×10^{-6} K^{-1}	τ_{therm}	8.5 ms
E	300 MPa	α	0.01
V_{cant}	1×10^{-14} m^3	χ'	242
M_s	760 kA/m		

Notes:
a) subscripts refer to dissimilar materials: 1 is for silicon dioxide films and 2 is for silcon nitride films.
b) it is assumed $t = t_{1,2}$, $\rho = \rho_{1,2}$, $E = E_{1,2}$

noise level of 1 nm/$\sqrt{Hz}$ observed for our instrument we estimate a similar power sensitivity.

C. Instrumentation.

The detection electronics are typical of electronic chopping measurement methods. The schematic diagram is shown in Fig. 3. We monitor the deflections of the cantilever with a laser beam-bounce optical lever. A diode laser source is focused onto the cantilever and reflected onto a split photodiode detector. This system is commonly found in commercial AFM instruments and is capable of detecting vibrations as small as 10 pm under ambient conditions. The microwave output from the sweeper is amplitude modulated by a 100 Hz square wave. An alternative approach would be to modulate the bias field to avoid the need to disturb the device under test. The square wave also serves as the reference for a lock-in amplifier that measures the difference output from the split photodiode detector. The lock-in time constant is set to 100 ms. The reflected wave from the microstrip resonator is monitored with the tuning scope. The frequency is adjusted to obtain a minimum reflected wave amplitude as measured by the rf detector, indicating a maximum coupling of power into the micostrip resonator.

D. Sensor Fabrication.

Cantilevers are fabricated by starting with double sided polished <100>-silicon wafer about 300 μm thick. Wafers are striped of native oxide in a buffered HF oxide etch (BOE) solution. A 250 nm layer of LPCVD low stress silicon nitride is deposited onto the wafer: 835°C, 100 sccm dichlorosilane, 17 sccm ammonia, 250 mTorr. A 500 nm layer of low-temperature silicon oxide (LTO) is subsequently deposited onto the nitride: 450°C, 90 sccm oxygen, 66 sccm silane, 350 mTorr (Fig. 4a). The front side LTO oxide layer is then patterned with a BOE etch (Fig. 4b). This step removes the LTO from the backside as well. A second 250 nm nitride layer is grown on the wafer (Fig. 4c). The backside nitride layer is then patterned with a plasma etch: CF_4 30 sccm, O_2 15 sccm, 50 W (Fig. 4d). An etch pit is formed during a KOH etch: 25% KOH in water 80°C (Fig. 4e). The etch pit terminates at the nitride film on the front side of the wafer. During the KOH etch the front side LTO is protected from the KOH by the second nitride layer. The cantilever is released in the plasma etcher (Fig. 4f). An optical micrograph of a cantilever is shown Fig. 5. The cantilever has dimensions of 1000 μm × 20 μm × 0.5 μm and a volume of $V_{cant} = 1\times10^{-14}$ m^3.

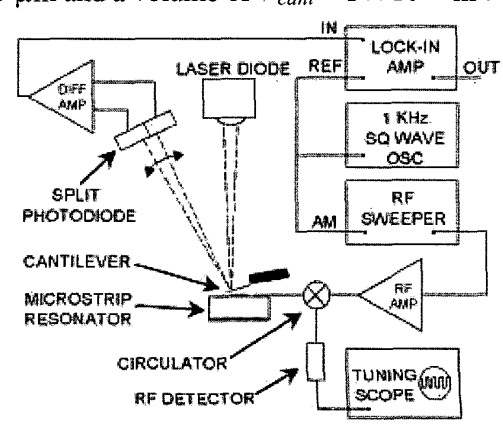

Fig.3 Detection electronics for FMR calorimetry.

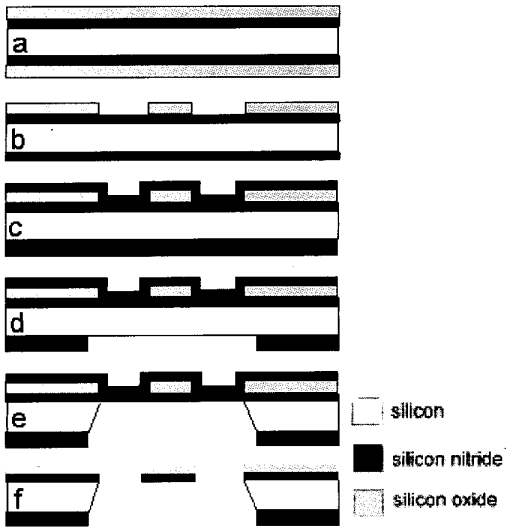

Fig. 4. Fabrication steps for bimaterial cantilever (see text for details).

We prepared the active permalloy tip by depositing 50 nm NiFe alloy (81% Ni) onto the cantilevers. Depositions were done in a diffusion pump vacuum chamber with a liquid nitrogen cold trap. The background pressure was 2.66×10^{-4} Pa. The films were evaporated from alumina coated tungsten boats at a deposition rate of 0.15 nm/s. The permalloy is deposited onto the end of the cantilever using a shadow mask to restrict deposition to only the very end of the cantilever. This typically results in a probe with dimensions of 20 μm × 20 μm × 0.05 μm and a volume of $V_{mag} = 2 \times 10^{-17}$ m^3.

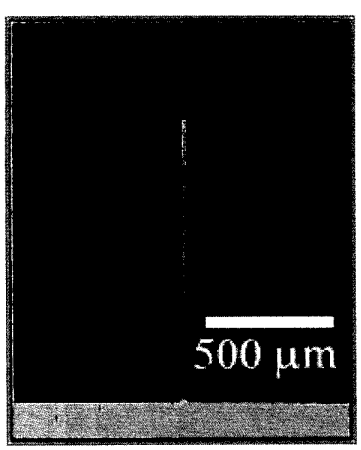

Fig. 5. Photomicrograph of all dielectric bimaterial cantilever

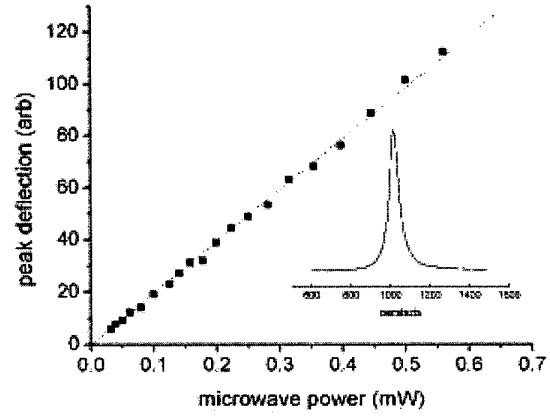

Fig. 6. Peak cantilever vibration as a function of microwave power. The inset shows a typical Lorentzian absorption line observed for the sensor.

RESULTS AND DISCUSSION

Figure 6 shows the FMR microwave absorption of the permalloy probe as a function of microwave input power level. The inset shows a typical absorption curve. H_o, M_s, χ', and α are determined by fitting the peak to a Lorentzian line shape expected for FMR (see Table 1). As expected the calorimeter signal is linearly proportional to the input power to the microstip resonator.

Figure. 7 shows measurements made on the microstrip resonator by scanning the probe approximately 50 μm above the surface. The stripline was carrying a 9.15 GHz microwave

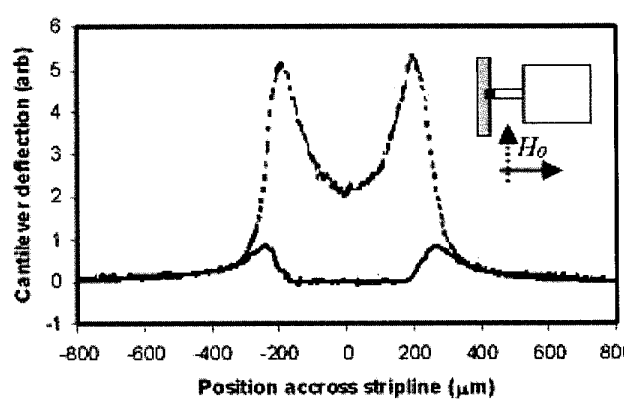

Fig. 7. Cantilever response as a function of position across the stripline. Dashed curve is with bias field H_0 parallel to the stripline. Solid curve is with bias field transverse to stripline.

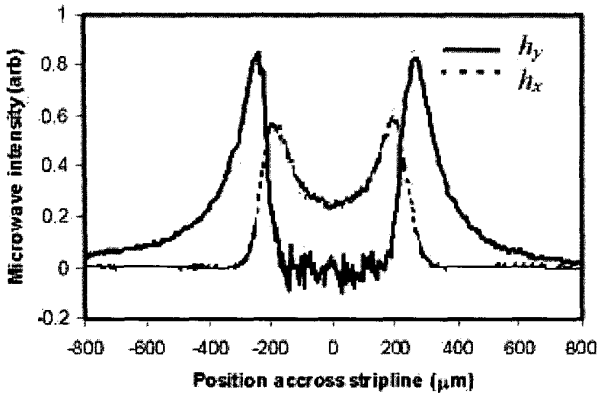

Fig. 8. Reconstructed amplitudes of the components of the microwave field transverse to the stripline and perpendicular to the stripline substrate.

signal and the bias field was fixed at 0.11 T. Two orthogonal orientations of the bias field were used to enable separation of the microwave components. The solid curve shows the response of the cantilever with the bias field in the z direction, parallel to the stripline. In this orientation, the instrument is sensitive to microwave fields in the x and y directions. The dashed curve shows the response with the bias field oriented in the x direction, transverse to the stripline for sensitivity to the y and z components of the microwave field.

By symmetry, at the central antinode of the resonator, there can be no z component of the standing wave and there can be no circular polarization in the x-y plane. Thus, the response from the second orientation is from the y component only. Using this restriction and the relationship between χ_{ip} and χ_{op}, the x and y components of the microwave field can be reconstructed from these data as shown in Fig. 8. The results are in qualitative agreement with [1] and [10].

SUMMARY

We have developed a low insertion-loss microwave probe based on FMR for power measurements of magnetic fields near active devices. The probe relies on a bimaterial cantilever as a calorimeter sensor. The cantilever is fabricated using dielectric films. The probe currently has a lateral resolution of 20 μm (defined by the probe geometry), and a power resolution in the femtowatt range (limited by thermal excitation of the cantilever).

REFERENCES

[1]. R. P. Wharton and G. P. Rodrigue, "A dominant mode analysis of microstrip," IEEE Trans. Microwave Theory and Techniques, **20**, pp. 552-555, 1972.

[2]. J. Moreland, M. Lohndorf, P. Kabos, and R. D. McMichael, "Ferromagnetic resonance spectroscopy with a micromechanical calorimeter sensor," Rev. Sci. Instrum. **71**, pp. 3099-3103, 2000

[3]. A. Jander, J. Moreland, and P. Kabos, "Micromechanical detectors for local field measurements based on ferromagnetic resonance," J. Appl. Phys. **89**, pp. 7086-7071, 2001.

[4]. J. R. Barnes, R. J. Stephenson, C. N. Woodburn, S. J. O'Shea, M. E. Welland, T. Rayment, J. K. Gimzewski, and Ch. Gerber, "A femtojoule calorimeter using micromechnaical sensors," Rev. Sci. Instrum. **65**, pp. 3793-3798, 1994.

[5]. R. J. Roark and W. C. Young, *Formulas for Stress and Strain*, McGraw Hill, New York, 1975.

[6]. C. Kittel, "Interpretation of anomalous Larmor frequencies in ferromagnetic resonance experiment", Phys. Rev. **71**, 270 (1947).

[7]. A. Jander, J. Moreland, and P. Kabos, "Angular momentum and energy transferred through ferromagnetic resonance," Appl. Phys. Lett. **78**, 2348, 2001.

[8]. S. Chikazumi, *Physics of Magnetism*, Kreiger Publishing, Malabar, Florida, pp. 333-348, 1964.

[9]. D. Sarid, *Scanning Force Microscopy with Applications to Electric, Magnetic, and Atomic Forces*, (Oxford, New York,1991), pp.39-53.

[10]. C. Shafer, "Dominant mode of the microstrip transmission line," Harvard Univ. Tech. Rep., No. 257, Nov. 25, 1957.