63rd ARFTG Conf. Dig., pp. 151-156, June, 2004.

A First Step towards a Wave-Based 'Stochastic' Calibration for Multi-Port Vectorial Network Analyzers.

Yves Rolain[1], Wendy Van Moer[1] and Don DeGroot[2].

[1]Vrije Universiteit Brussel (Dept. ELEC/TW); Pleinlaan 2; B-1050 Brussels (Belgium)
[2]National Institute of Standards & Technology, MC 818.01, 325 Broadway, Boulder, CO 80305, USA
Phone: +32.2.629.29.49; Email: Yves.Rolain@vub.ac.be, Wendy.vanMoer@vub.ac.be

Abstract - ***A Classical calibration methods use S-parameters as raw data and do not take measurement uncertainty into account. As such, these methods are deterministic in nature. Recent 'stochastic' calibration approaches rely on the statistics of S-parameters, that are very difficult to obtain under practical constraints.***

Since network analysers mainly measure waves, a wave based stochastic calibration framework is proposed here to circumvent this problem. Existing (auto-)calibration measurement sequences can easily be included. The framework provides: (i) confidence bounds on the calibration data, (ii) a flexible definition of custom calibration standard sequences, and (iii) a straightforward extension to multiport devices.

I. Introduction

During the last decades, a lot of methods for the calibration of vectorial network analysers (VNA) have been developed. Looking back at the evolution of the calibration procedures, it is striking that newer calibration procedures require less prior knowledge and less stringent assumptions than the older ones.

Starting from an SOLT calibration where all the calibration standards are assumed to be known perfectly, one ends with the multi-line TRL methods, where prior knowledge about the standards is reduced to the knowledge that the standard is a transmission line of known length or a repeatable reflection.

One thing that remains inflexible in these methods, is that they require an a priori defined set of calibration elements to work properly. Since modern RF and microwave measurements are moving towards probed on-chip applications, it is often the case that a set of test structures that is available on the die does not perfectly fulfil all the constraints imposed by the rigid calibration procedures.

From the measurement point of view, classical methods start with the assumption of noise-free data, which is reasonable for narrow band detection as is used in the linear VNA. Whenever wide band IF detection is used, as is the case for pulsed RF setups or network analysers for nonlinear systems, the data can no longer be assumed to be noise-free and a 'stochastic' calibration, that takes measurement and reconnection noise into account, increases the accuracy of the final data significantly.

What is common to all the calibration procedures is that they rely on the basic assumption that the S-parameters are the measured quantity. This assumption is not really valid in practice, as the measured quantity in a VNA is often a wave instead of a wave ratio. From a statistical point of view, using the raw S-parameters instead of the raw waves as an input quantity to the calibration is not a good practice, as the distribution of the ratio of normal distributed quantities is not a well behaved random variable.

In this work, an approach is proposed that starts from measured waves with known or measurable statistical properties, and allows to calibrate a VNA for linear or nonlinear systems whenever a sufficient set of sufficiently well known standards is available.

II. The Considered Setup

A. Properties of the Analyzer

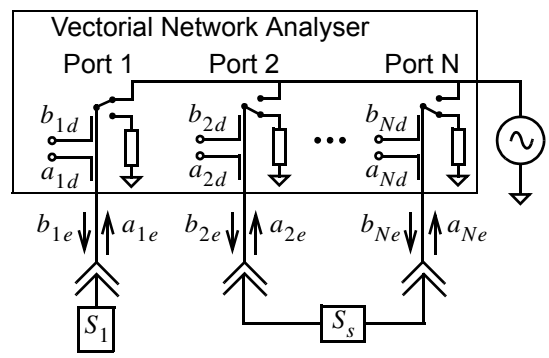

Fig. 1. Setup of the N_p -port analyser.

The general case of an N_p -port analyser is considered, as is shown in Figure 1. The basic knowledge about the operation of the instrument is to be formalised first.

Assumption 1. The VNA is a linear, time invariant system (LTI).

In practice, this means that for any frequency ω in the operating range of the analyser, the relation between the unknown noise-free waves W_d distorted by the network analyser and the exact unknown waves W_e impinging the device under test (DUT) is linear. When put in vector notation,

$$W_e(\omega) = D(\omega) W_d(\omega) \tag{1}$$

where the wave vectors W contain the stacked waves impinging the successive ports of the VNA, viz.

$$W = \begin{bmatrix} B \\ A \end{bmatrix} = \left[\begin{bmatrix} b_1 & \dots & b_N \end{bmatrix} \begin{bmatrix} a_1 & \dots & a_N \end{bmatrix} \right]^T \tag{2}$$

and the matrix D is the $2N_p \times 2N_p$ complex compensation matrix that ideally inverts the non-ideality of the VNA. The

whole idea of the calibration procedure is to determine this matrix and its associated error bound as accurately as possible.

To this end, a number of successive experiments is carried out, each with a different set of standards connected to the ports of the VNA. The set of standards used in one experiment is from now on called a calibration box or calbox. The number of calboxes that is used in the process of the calibration is labelled N_c. Note that a calbox can contain any combination of 1-port standards (impedances) and 2-port standards (transmission lines, thru connections or known 2-port devices such as ecal devices). Since the calboxes contain different standards and use distinct measurements, it is of good practice to assume that

Assumption 2. The measurements performed to characterise the calboxes used in a calibration process are independent from calbox to calbox.

Essentially, this means that the measurements performed when one set of standards is hooked up do not depend on the measurements of the previously connected set of standards.

Each calbox is characterised using N_p independent measurements, that are obtained exciting each port of the VNA in turn. In total, $N_c N_p$ different sets of waves are acquired during the calibration process.

III. The Noise Framework

Since the goal of this paper is to obtain a statistically sound treatment of the noise, it will not only identify the compensation matrix D, but also calculate the statistical confidence bounds on the calibration. To get there, a clear cut definition of the 'noise' perturbation in the setup is necessary. Four different classes of perturbation are taken into account: two classes relate to the instrument and two others relate to the standards themselves.

A. Instrument measurement noise

The measurement noise contains any random perturbation that is generated by the instrument itself. This contribution is assumed to behave as an additive perturbation on the distorted waves measured by the VNA. Put in equations, the influence of the measurement noise is:

$$W_{dm}(\omega) = W_d(\omega) + n_w(\omega) \tag{3}$$

where a suffix m indicates a measured quantity. Since this noise source is built up as the sum a large number of different noise contributions, it is sensible to assume that

Assumption 3. the noise $n_w(\omega)$ on the measured waves is additive complex circular normal distributed with zero mean.

The assumed noise properties can be proven to hold whenever the wave spectra are obtained using the Discrete Fourier Transform (DFT) of a measured time sequence ([1]). In any case, they can be verified experimentally.

B. Physical noise produced by standards and DUT.

Most often, the physical noise produced by the standards, that are passive elements, is much smaller than the measurement noise of the instrumentation hardware and can therefore safely be neglected. In the case of a (noisy) DUT however, this is no longer acceptable in general.

As the physical noise contaminates the input waves of the VNA, it is modelled as a disturbance on the 'exact' waves:

$$W_{em}(\omega) = W_e(\omega) + n_{dut}(\omega) \tag{4}$$

Again, since the DUT noise consists of the sum of a large number of noise sources, it is safe to assume that

Assumption 4. the physical noise produced by the DUT and the standards $n_{dut}(\omega)$ is additive complex circular normal distributed with zero mean.

C. (Re)connection noise.

On top of the measurement noise, there is another, much more insidious noise source that corrupts the measured waves: signal connections at microwave frequencies are not perfectly repeatable. Measuring the same standard twice with and without a reconnection can significantly alter the measured data.

For a narrow band IF system like a classical VNA, the influence of the reconnection noise is easily a factor larger than the measurement noise in practice, as is shown in Figure 2. The 10 curves labelled 'Exp1' on the figure show

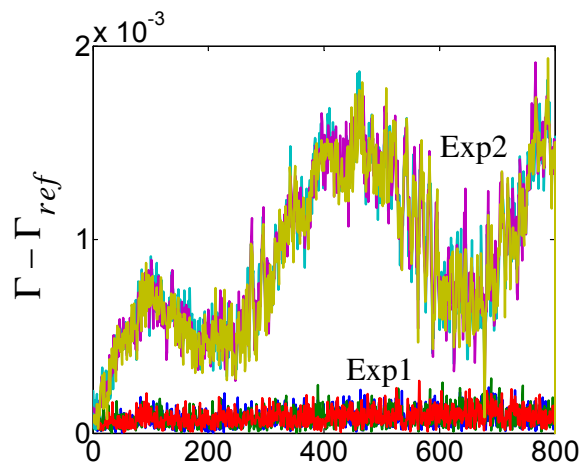

Fig. 2. Variation of 10 repeated measurements without (bottom curves) and with (top curves) reconnection of a load on an Agilent PNA network analyser is shown.

the spread of 10 repeated measurements of a load around its mean value without reconnection. The set of curves labelled 'Exp2' is obtained similarly after reconnection of the standard. The spread is calculated with respect to the mean value of the first experiment. Note the large, seemingly deterministic deviation of the standard' reflection factor, that shows the influence of the realisation of the reconnection noise source.

Two possible models for the reconnection error can be proposed. From the physical perspective, it is tempting to consider the reconnection as a part of the standard element, and hence to include it as a perturbation that corrupts the standard itself, leading to a perturbed set of S-parameters,

$$S_m(\omega) = S_e(\omega) + s_r(\omega) \tag{5}$$

where the lower case letter indicates the noise contribution. A second, equivalent description leaves the S-parameters of the standards untouched, and considers the reconnection error as a perturbation on the exact waves,

$$W_{em}(\omega) = W_e(\omega) + s_r(\omega)a_e(\omega) = W_e(\omega) + n_r(\omega) \tag{6}$$

Even if these descriptions are equivalent from the noise modelling point of view, it will become clear later in the paper that the selection of this model influences the estimation process.

Recall that this type of perturbation is invisible as long as no reconnection is performed: the measured data looks perfectly smooth and the perturbation appears to be absent. Again, it will be assumed that

Assumption 5. The reconnection noise n_r is a complex circular normal distributed random process with zero mean, that is random with respect to the reconnection.

The reconnection error is only present on the exact reflected wave for one-port standards, and on all but the exact excitation wave for two port standards. Note also that in the two-port case, this error has also a highly structured covariance matrix.

D. Uncertainty on the calibration standards

To make the noise framework complete, a last source of error is to be included, namely the error on the standards themselves.

If the calibration is performed in a connectorized setup, it is uncommon that the end-user possesses a sufficient number of standard elements to be able to characterise the spread on the standard values. One then has to rely on the error bounds that are provided by the manufacturer of the standard elements.

If, on the other hand, the calibration is performed in an on-wafer environment, a number of similar standards can be available or the uncertainty on the standards can be calculated using the process parameters of the production process.

Most often, transmission lines are used as an on-wafer calibration element. This is for example the case for the multi-line TRL calibration ([2]). The initial step in such calibration procedures consists of the determination of the complex propagation constant of the standards. If this property is identified properly, its variance is obtained as a by-product of the estimation process ([3]) and can then be used here to characterise the standards. In all cases, it will again be assumed that

Assumption 6. the 'noise' on the standard value is complex circular normal distributed with zero mean, that is independent from one standard to the other.

This disturbance corrupts the reflection factor for 1-port standards, and the S-parameter matrix for 2-port standards. As was the case for the reconnection noise, the covariance matrix of this noise process will be highly structured. The noise source perturbs the exact S-parameters, viz.

$$S_{em}(\omega) = S_e(\omega) + n_s(\omega) \tag{7}$$

Note that not all the elements in the disturbance vector need to be non-zero.

E. The general disturbance model

Adding up all the disturbances in one general noise framework, one obtains two possible perturbation descriptions for the measured waves and standard elements:

$$\begin{aligned} W_m(\omega) &= D(\omega)(W_e(\omega) + n_{dut}(\omega) + n_r(\omega)) + n_w(\omega) \\ S_{em}(\omega) &= S_e(\omega) + n_s(\omega) \end{aligned} \tag{8}$$

or as an alternative,

$$\begin{aligned} W_m(\omega) &= D(\omega)(W_e(\omega) + n_{dut}(\omega)) + n_w(\omega) \\ S_{em}(\omega) &= S_e(\omega) + n_s(\omega) + s_r(\omega)a_e(\omega) \end{aligned} \tag{9}$$

Now that the noise model for a single experiment is derived, it will be extended to cover the calibration process as a whole.

IV. Introduction of the Calboxes

A general calibration process consists of the concatenation of a series of calbox experiments, that each involve a different set of calibration standards. For the measurement noise, the physical standard noise and the DUT noise, there is no interaction between successive calbox experiments, hence the uncertainty of the total calibration is obtained by the addition of the individual calbox noise contributions.

For the reconnection noise, the situation is again somewhat more complex. The order in which the different calboxes are combined matters, as this determines the number of reconnections that are to be performed and hence influences the reconnection uncertainty that is to be accounted for.

Without loss of generality, a 2-port VNA is used as an example, and only reconnection noise is considered. To be even more concrete, the variance of the noise for successive calboxes (L_1, O_2) and (L_1, S_2) containing a load L, an open O, and a short S are taken as an example.

If the reconnection noise is assumed to contaminate the waves, the covariance of the measured quantities is:

$$C_s(\omega) = \begin{bmatrix} \sigma^2_{L_1} & 0 & 0 \\ 0 & \sigma^2_{O_2} & 0 \\ 0 & 0 & \sigma^2_{S_2} \end{bmatrix} \quad C_{W_e} = \begin{bmatrix} \sigma^2_{W_1} & \rho^2_{12} \\ \rho^{2H}_{12} & \sigma^2_{W_2} \end{bmatrix} \tag{10}$$

where the correlation matrix ρ_{12} accounts for the absence of reconnection of the L_1 standard, and the $\sigma^2_{W_k}$ matrix for the reconnection variance.

$$\sigma_{W_1} = \mathrm{diag}(\begin{bmatrix} l_1 a_{e_1} & o_2 a_{e_2} & 0 & 0 \end{bmatrix}) \qquad \rho_{12} = \mathrm{diag}(\begin{bmatrix} l_{1_r} a_{e_1} & 0 & 0 & 0 \end{bmatrix})$$
$$\sigma_{W_2} = \mathrm{diag}(\begin{bmatrix} 0 & l_1 a_{e_1} & 0 & s_2 a_{e_2} \end{bmatrix}) \tag{11}$$

Note that the covariance matrix depends on the exact incident wave, that is not known in practice.

If the reconnection noise is assumed to influence the S-parameters, the covariance matrix for the 2 calboxes becomes:

$$C_s(\omega) = \begin{bmatrix} \sigma_{L_1}^2 & 0 & \sigma_{L_1}^2 & 0 \\ 0 & \sigma_{O_2}^2 & 0 & 0 \\ \sigma_{L_1}^2 & 0 & \sigma_{L_1}^2 & 0 \\ 0 & 0 & 0 & \sigma_{S_2}^2 \end{bmatrix} \quad C_{W_e} = \begin{bmatrix} \sigma_{W_1}^2 & 0_{4\times 4} \\ 0_{4\times 4} & \sigma_{W_2}^2 \end{bmatrix} \tag{12}$$

Note that this time, an additional variable needs to be introduced (and hence estimated) each time a standard is used in a calbox. The absence of a reconnection for the load in the two calboxes is then expressed in the full correlation of the corresponding entries of the covariance matrix.

Theoretically speaking, both alternatives result in the addition of a number of variables to the parameter vector. For the parameters to be identifiable, more calboxes will therefore be required, resulting in a longer calibration process.

This can be circumvented in the former alternative, if the exact input waves are replaced by their measured counterparts, and the influence of the noise on the power of the incident wave is neglected to obtain a fixed, deterministic covariance matrix. As the incident wave in the calibration process has a high signal-to-noise ratio, this assumption is acceptable.

It is not clear a priori if one alternative will yield a lower variance as the other. Therefore, in this first attempt, the first alternative is selected according to the parsimony principle.

Grouping the noise sources according to their stochastic dependence, while leaving out the explicit dependence on the frequency to simplify the notation, one obtains

$$\begin{aligned} W_m &= W_d + Dn_r + (n_w + Dn_{dut}) = W_d + n_m \\ S_{em} &= S_e + n_s \end{aligned} \tag{13}$$

Based on this known structure, a way to characterise the perturbation experimentally is derived next.

V. Measuring the Noise Sources

A. Sources that are random with respect to time

As was shown in (13), the two sources n_{dut} and n_w that are random with respect to time perturb the result in a similar way. The instrument distortion matrix D will smear the DUT related noise to both incident and reflected measured waves. It will therefore be impossible to separate their influence in the noise analysis. From now on they will be considered to be one noise source and are labelled measurement noise n_m.

The measurement noise is the most easy to characterise experimentally. The variance of this noise source can be estimated using the sample covariance C_w obtained form synchronised repeated measurements. Note that the experiments are performed under identical experimental conditions.

Assumption 7. the start of the wave measurements is synchronised to the excitation signal.

In the frequency domain, this means that the phase of the exciting wave does not change in between repeated experiments. Note that this is easy to fulfil in many practical cases.

B. Sources that are random with respect to reconnection

The characterisation of the reconnection error $n_r(\omega)$ is undertaken as an off-line process. The sample covariance C_r is again used as an estimation of the properties of this noise source.

In this case, a sample is a reconnection experiment, and hence the number of practical realisations is limited to less than 10. This is sufficient to maintain the statistical properties of the subsequent calibration procedure.

The nasty thing about this noise source is that it is operator-dependent: skilled operators will obtain much lower variability than unskilled ones. A new user is therefore requested to perform a limited number of repeated connections to determine a sensible C_r value.

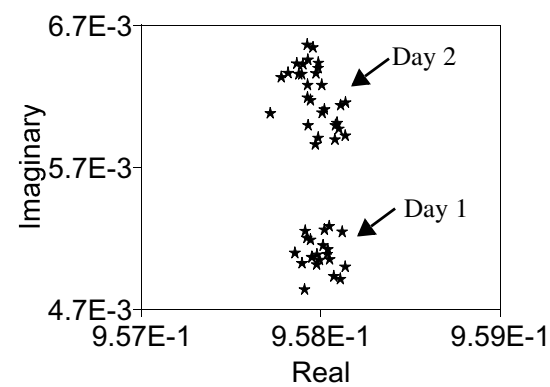

Fig. 3. Repeated measurements of the reflected wave of load using the LSNA.

C. Sources that are random with respect to the physical standard

In this case it is improbable that a sample variance can be calculated, as this now requires different standards to be present. If these standards are available, as can be the case in on-wafer measurements, the sample covariance C_s can again be used to measure the noise properties, or can be obtained as a by-product of the characterisation of the transmission lines (see before).

VI. Verification: Circular Normal Distribution.

The hypothesis of the circular complex normal distribution is checked first. Thereto, 100 synchronised measurements of the reflected wave of a load are taken using a LSNA vectorial network analyser for nonlinear systems sold by Maury Microwaves, and plotted in the complex plane. The results contained in Figure 3 show 2 successive runs of 100 experiments that are taken with a delay of 24 hours.

Each separate cluster is tested for circularity: a correlation between the real and imaginary parts of the waves could not be detected, and the variance of the real and imaginary parts of the waves are equal within their uncertainty. The noise hence appears to be circular distributed.

Next, a normality test is performed using the same data. The Kolmogorov-Smirnoff test indicates that the measured waves have a normal distribution within the uncertainty levels associated to the number of experiments.

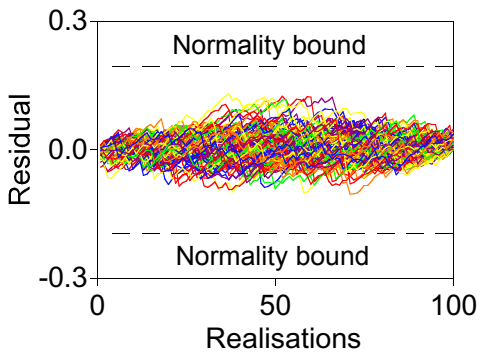

Fig. 4. The results of the Kolmogorov Smirnoff test indicate that the distribution of the measured waves is normal

The combination of both tests shows that the Assumption 3. is indeed valid for the performed measurement.

VII. Verification: SOLT revisited.

To highlight the difference between the proposed and the traditional approach, a preliminary estimator has been developed that has been used in a simulation on a sample setup. The setup considered contains a 2-port VNA with a pure 8-term error behaviour: the ports are considered to be perfectly isolated.

The SOLT calibration contains 4 calboxes. The first three ones connect 2 loads, opens and shorts to both ports of the VNA. The fourth calbox is an ideal thru connection. This simplified setup is selected on purpose to show the properties of the new framework.

In a first experiment, the standards are assumed to be known exactly, and the reconnection noise is assumed to be zero. As a result, only measurement noise is added to the measured waves. The signal-to-noise ratio of the waves is set to 60 dB , which is a typical setting for a VNA for nonlinear systems. A total of 1000 simulations is performed. The compensation matrix is calculated for the classical LOST and the new WavCal. The mean squared error for each compensation coefficient $D_{[i,j]}$,

$$d_{ms} = \sqrt{\mathscr{E}(\{D_{[i,j]} - D_{e[i,j]}\}^2)} \tag{14}$$

is shown together with their variance for both calibration methods in Figure 5.

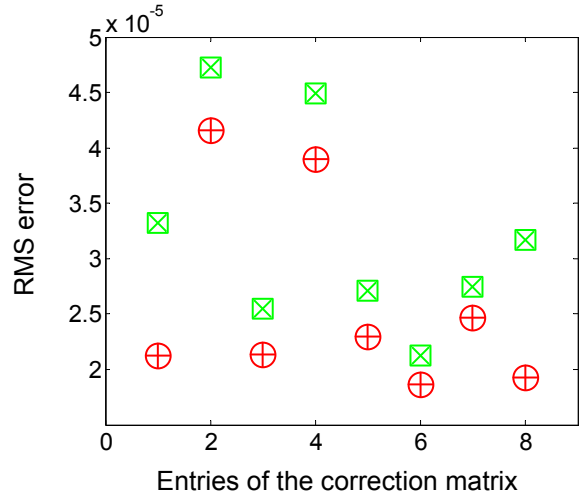

Fig. 5. Mean squared error d_{ms} and standard deviation σ for the classical LOST (d_{ms} squares, σ crosses) and the WaveCal (d_{ms} circles, σ pluses) compensation coefficients.

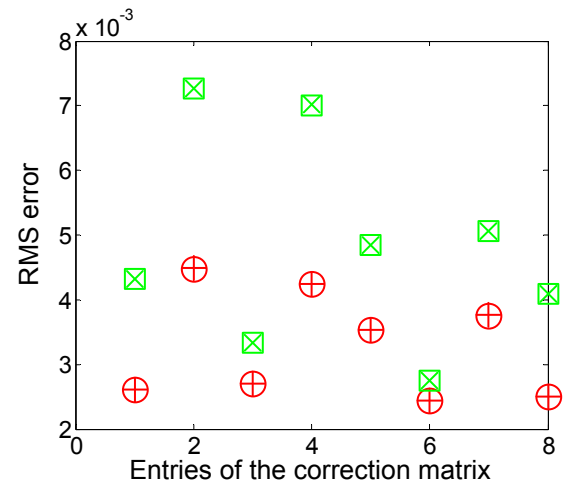

Fig. 6. Mean squared error d_{ms} and standard deviation σ for the classical LOST (d_{ms} squares, σ crosses) and the WaveCal (d_{ms} circles, σ pluses) compensation coefficients.

The simulation shows that the standard deviation of the parameters extracted with the new method is about 25% lower than for the classical method. Since the mean squared error and the standard deviation are equal, no bias is visible in the result.Next, the influence of the uncertainty on the standards is analysed. The level of the uncertainty on the standards is chosen to be equal to the measurement uncertainty. This is an idealisation of the reality in many cases.

As shown in Figure 6 the variability has increased for both methods, but the speed of the increase is lower for the new method. There is still no visible bias on the measurements.

When the same simulation is done over again, but the standard noise variance is forced to zero in the new method, the cost function shows a significant increase, which indicated a high sensitivity of the method to modelling errors.

VIII. Conclusion

A wave based stochastic calibration framework was developed. The concept of calibration based on waves as input data has been shown to be feasable. It has also been shown that reconnection noise can be adequately included in a calibration, and that the calibrations performed with the new framework have a lower variability than their classical counterparts, without a significant increase in bias error.

The method also provides error confidence bounds on the calibration. This is of extreme importance for the modelling of the measured devices, as this allows validated models to be obtained.

The method can easily adapt to very different sets of measurement standards, that are exactly known, uncertain or even unknown (but repeatable). As such, the method is one step forward in the enabling of stochastically validated model extraction for linear and nonlinear devices.

Acknowledgement

This work is supported by the Fund for Scientific Research (FWO-Vlaanderen), the Flemish government (GOA-IMMI), and the Belgian government (Inter university Poles of Attraction, IUAP V/22).

References

[1] Brillinger, D. R. (1981). Time Series:Data Analysis and Theory. McGraw-Hill, New York.

[2] -R. B. Marks, "A Multiline Method of Network Analyzer Calibration," IEEE Trans. Microwave Theory Tech. vol. 39, pp. 1205-1215, July 1991.

[3] Corrections for Nonlinear Vector Network Analyzer Measurements Using a Stochastic Multi-Line/Reflect Method Donald C. DeGroot, Yves Rolain, Rik Pintelon, and Johan Schoukens

[4] H. Van Hamme and M. Vanden Bossche, "Flexible vector network analyzer calibration with accuracy bounds using an 8-term or a 16-term error correction model," *IEEE Trans. Microwave Theory & Tech.,* vol. 42, no. 6, pp.976-987, June 1994.