Vector Signal Characterization of High-Speed Optical Components by Use of Linear Optical Sampling With Milliradian Resolution

P. A. Williams, T. Dennis, I. Coddington, W. C. Swann, and N. R. Newbury

***Abstract*—We demonstrate linear optical sampling measurements optimized for characterization of the signals produced by optical components. By sampling the optical electric field before and after the component, we isolate the full vector field (phase and amplitude) of the signal separate from the input laser drift. Synchronization of the low-jitter mode-locked sampling laser (e.g., frequency comb) with the modulation rate allows measurement of the phase with milliradian noise. As a demonstration, we measure 10-Gb/s differential phase-shift keying modulated data with several different lasers. The technique is readily scalable to systems of much higher bandwidth.**

***Index Terms*—Differential phase-shift keying (DPSK), linear optical sampling (LOS), optical phase monitoring.**

I. Introduction

HIGH-SPEED optical networks running at 40 Gb/s are being installed with plans for upgrade paths to 100 Gb/s. These high data rates, and accompanying phase-shift-keying (PSK) formats, present a significant measurement challenge, requiring measurement bandwidths up to ten times the data rate. Linear optical sampling (LOS) uses a short pulsed-laser and balanced quadrature detection in an optical interferometric sampling system to measure fast, complex optical signals [1]. Here, we examine the utility of LOS for characterizing the temporal phase imparted by a modulator or other component. Several techniques have been demonstrated for measuring component optical phase including low-frequency homodyne [2] and dual quadrature detection interferometry techniques [3] as well as higher frequency stretched-pulse interferometry [4] and gated-pulse techniques [5]. However, LOS is an attractive technique since it can operate at very low optical powers, directly measures the complex waveform, and its equivalent sampling approach has an intrinsic time resolution limited only by the pulsewidth of the mode-locked sampling laser (which can be well below 0.1 ps) rather than the bandwidth of the detection electronics.

LOS uses an interferometric configuration where a mode-locked laser linearly samples the full complex electric field of the optical data waveform through quadrature detection. In order to measure the temporal phase of the modulator φ_m, other sources of phase noise, primarily the intrinsic phase noise on the lasers, must be either removed or stabilized. There are several different options. In [1], the input laser phase noise was removed by curve fitting, which requires a laser with negligible phase noise at Fourier frequencies near the modulation rate. Another option (explored here) is to use a low phase-noise, cavity-stabilized input laser [6], but we find this approach too experimentally demanding. The third option, which we use successfully here (illustrated in Fig. 1), is to use a phase-referencing technique with a pair of quadrature demodulators to remove the input laser phase noise. This referencing technique allows us to use a standard distributed feedback (DFB) laser diode as the input data laser. This is similar to the approach of [7], but our referencing technique is able to directly measure the modulated phase (not the differential phase) and allows a bit-rate-independent apparatus.

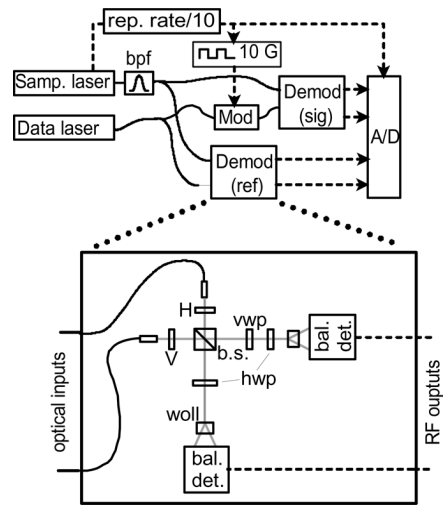

Fig. 1. Phase-referenced LOS setup (top) with expanded view of a demodulator (bottom). Mod: Mach-Zehnder modulator, bpf: band-pass filter, A/D: analog-to-digital converter, bal. det.: balanced detector, woll: Wollaston beam splitting polarizer, V: vertical polarizer, H: horizontal polarizer, vwp: variable waveplate, hwp: half-waveplate, b.s.: nonpolarizing beam splitter.

In any LOS system, the interferometric signal is sampled synchronously with the mode-locked sampling laser. Here, we also synchronize the data modulation rate (10 GB/s) to the 100-MHz mode-locked laser repetition rate, allowing averaging of multiple waveforms, limited only by the residual relative timing jitter of the sampling laser and the modulation source (a 10-GB/s pattern generator). The relatively high sampling rate of 100 MHz is advantageous over the lower frequencies used in previous works since the higher repetition rate allows extremely

Manuscript received July 15, 2008; revised September 02, 2008. Current version published November 21, 2008.

The authors are with the National Institute of Standards and Technology, Boulder, CO 80305 USA (e-mail: pwilliam@boulder.nist.gov).

Digital Object Identifier 10.1109/LPT.2008.2005787

U.S. Government work not protected by U.S. copyright.

Authorized licensed use limited to: IEEE Xplore. Downloaded on February 2, 2009 at 18:52 from IEEE Xplore. Restrictions apply.

low timing jitter and the impact of this jitter is reduced by the faster acquisition times.

II. Experimental Setup

The upper portion of Fig. 1 illustrates our phase-referenced configuration. Light from the data laser is split into two fiber-optic paths: one passes through the modulator and goes to the "signal" quadrature demodulator, while the other goes directly to the "reference" quadrature demodulator.

The lower portion of Fig. 1 illustrates the topology of our quadrature demodulators. Equivalent to the design described in [1], light from a modulated data laser arrives in one optical port, and short pulses from the 100-MHz mode-locked laser are launched into the other. With the two inputs orthogonally polarized, the relative phase between the two lasers is controlled by two half waveplates and a nominal 90° variable waveplate. The variable waveplate enables correction for stray birefringence elsewhere in the path to less than 0.5°. This error is further reduced through software phase correction. Two balanced detectors (350 MHz bandwidth) are used to extract the ac beat note between the lasers. These signals are read by a 1-GHz bandwidth real-time oscilloscope (8-bit resolution, with noise that is 2% of our signal).

Optical delay mismatches t_d between the splitter and the reference and signal demodulators degrade the phase compensation. Assuming white frequency laser noise, this residual (unreferenced) phase noise is $(2\pi\Delta\nu t_d)^{1/2}$ where $\Delta\nu$ is the full-width at half-maximum (FWHM) linewidth of the data laser. For example, our setup has $t_d < 300$ ps and $\Delta\nu = 500$ kHz, giving a 30-mrad residual phase noise. This is a significantly less stringent requirement on t_d than the 1-bit delay configuration of [7] that requires a path balance to within a small fraction of the bit period (data rate dependent).

Our sampling fiber laser generates a frequency comb [8], [9] with one tooth locked to a cavity-stabilized reference laser, yielding a stable repetition rate of 100 MHz and 37-fs timing jitter (integrated from 1 kHz to 5 MHz) and very low optical phase noise. The 10-Gb/s modulation rate of the pattern generator is locked to this sampling laser repetition rate. We could equally well have phase-locked the laser repetition rate to a factor of the data modulation rate, but our chosen approach allows us to evaluate the timing jitter of the data stream (pattern generator plus amplifier plus modulator) relative to the low-jitter sampling laser. Before the demodulator, the sampling laser output is filtered by a 0.5-nm FWHM band-pass filter centered at 1550 nm, yielding a pulsewidth of ~7 ps (estimated from the bandwidth of the filter).

We analyze the operation following the approaches of [1] and [10]. Assuming the filtered sampling pulse is much shorter than fluctuations in the data laser and if both are centered at the same frequency, the two balanced detector outputs of the reference demodulator yield the real and imaginary parts of $A_{\mathrm{ref}}(t) = \tilde{E}_S^*(0)\,E_D(t)$, where $E_D(t)$ is the time-domain electric field of the data laser and $\tilde{E}_S^*(0)$ is the amplitude of the sampling laser's electric field at the carrier frequency [1]. The phase of A_{ref}, $\varphi_{\mathrm{ref}}(t) = (\Delta\Omega t + \varphi_D(t) - \varphi_S(t))$ is the difference between the data laser phase φ_D and sampling pulse phase φ_S, with $\Delta\Omega t$ a constant linear phase slope due to the offset $\Delta\Omega$ between the center frequency of the data laser and the nearest comb tooth of the sampling laser. Similarly, the signal demodulator provides $A_{\mathrm{sig}}(t) = \tilde{E}_S^*(0)\,R(t)\,E_D(t) = R(t)\,A_{\mathrm{ref}}(t)$ with a phase $\varphi_{\mathrm{sig}}(t) = (\Delta\Omega t + \varphi_D(t) - \varphi_S(t) + \varphi_m(t))$. $R(t)$ is the desired complex modulation function with phase $\varphi_m(t)$, which can be found as $\varphi_m(t) = \varphi_{\mathrm{sig}}(t) - \varphi_{\mathrm{ref}}(t)$. This difference calculation eliminates the need to explicitly remove the $\Delta\Omega t$ beat-note phase term and does not require curve fitting or laser stabilization to remove the intrinsic laser phase noises φ_D and φ_s.

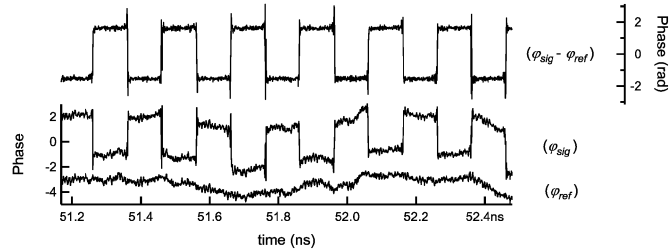

Fig. 2. Sampled phases of 10-Gb/s DPSK waveform. Vertical offsets are for clarity and $\Delta\omega t$ was artificially removed from φ_{sig} and φ_{ref} to illustrate drift.

The complex modulation waveform $R(t)$ repeats with period T_{mod}. Digitized samples of the reference and signal are acquired at times $t_k = kT_s$, where k is an integer and T_s is the laser sampling period. The modulator is phase-locked to the sampling laser such that $T_s = NT_{\mathrm{mod}} + \delta\tau$ (valid when $T_s > T_{\mathrm{mod}}$). So, the sampling laser pulses slowly walk through the modulation waveform with $T_s = 10$ ns, $N = 100$, and $\delta\tau = 1$ ps. Therefore, we sample the modulation function as $R(kNT_{\mathrm{mod}} + k\delta\tau)$. We express R in equivalent time by assigning the equivalent time $\tau_k = k\delta\tau$ to the kth data point of R. Averaging multiple repetitive waveforms reduces the statistical noise contributions, improving both phase and amplitude resolution of $R(\tau)$.

III. Results

Fig. 2 illustrates the operation of our phase-referencing technique for a DFB laser with a linewidth of 500 kHz (measured over 2 ms) modulated with an on/off nonreturn-to-zero differential phase-shift keying (NRZ-DPSK) format (Mach-Zehnder modulator biased at zero transmission). The pattern generator ran at 10.001 GHz, giving an equivalent-time sample period of $\delta\tau = 1$ ps. The reference phase (φ_{ref}) shows the phase drift of the unmodulated laser, which is also visible on the modulated signal (φ_{sig}), with large variations taking place within a single bit period. This makes a curve-fitting phase removal approach difficult. The subtracted phase $\varphi_m(t) = \varphi_{\mathrm{sig}}(t) - \varphi_{\mathrm{ref}}(t)$ of Fig. 2 shows excellent isolation of the modulator phase. The spikes at the bit transitions are noise due to the signal amplitude dropping below the noise floor in this zero-biased modulator configuration.

Fig. 3 shows the results for 500 measurements of two bit periods of on/off NRZ-DPSK data comprising 100 000 points sampled at 100 MHz (10 ns real time interval) for a total sampling duration of 1 ms. We plot the averaged $|R(t)|$ and $\varphi_m(t)$ of the modulator. The phase average was calculated by using only data with the modulator extinction above 15% of full-scale

Authorized licensed use limited to: IEEE Xplore. Downloaded on February 2, 2009 at 18:52 from IEEE Xplore. Restrictions apply.

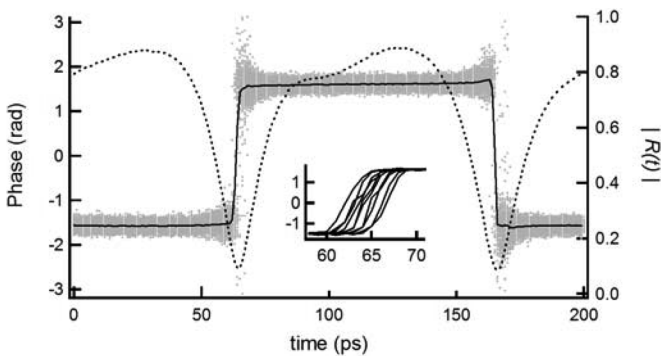

Fig. 3. Measured averaged magnitude of modulation function $|R(t)|$ (black dots), modulator phase φ_m (solid line), and unaveraged phase (grey dots) for zero-bias NRZ-DPSK on/off data at 10 Gb/s (with an equivalent period of 1 ps). Inset: closeup of the phase edge transition when the data is divided into ten subsections and averaged, illustrating jitter in the pattern generator.

transmission to exclude points where low optical powers caused phase noise greater than π.

The 500-kHz DFB data laser has a single-measurement phase noise (1σ) of 80 mrad, reducing to 4.2 mrad after $N = 500$ averages. Measurements with a 1-kHz linewidth fiber laser yields very similar results (80 mrad unaveraged phase noise reducing to 3.8 mrad after $N = 500$ averages and 1.2 mrad for $N = 3999$). In all cases, the averaged noise reduced as $N^{-1/2}$. The interferometers were not stabilized during the measurements.

We also replaced the data laser with our cavity-stabilized reference laser (linewidth $\sim$1 Hz, to which the sampling laser is locked) attempting to eliminate the need for the reference demodulator. However, we found that the phase of the data laser (measured at the demodulator) drifted by $\sim$3 rad over 100 μs. We attribute this large effect to acoustic noise and thermal drift in the transport fibers (over 100 m long), which carry the stabilized laser light from the cavity-stabilized laser in one room to the demodulator in a different room.

IV. Discussion

In considering the sources of phase noise on our measurement, we estimate the contribution from shot noise as $\sigma_{\varphi,\mathrm{shot}} = (2h\nu(P_S + P_D)/\eta P_S P_D \Delta t)^{1/2} \approx (2h\nu/\eta P_D \Delta t)^{1/2}$, where $\eta = 0.8$ is the quantum efficiency, $P_s = 2$ mW is the average power in the sampling pulse incident on one balanced detector, $P_D = 50$ μW is the average power of the modulated data laser incident on the balanced detector, $\Delta t = 7$ ps is the pulsewidth, h is Planck's constant, and $\nu = 195 \times 10^{12}$ Hz is the optical frequency. Since each demodulator consists of a pair of differential detectors, we find the shot noise on a demodulator phase measurement to be $\sigma\varphi_{\mathrm{shot,demod}} = 22$ mrad. The phase reference operation $\varphi_{\mathrm{sig}} - \varphi_{\mathrm{ref}}$ increases the noise by $\sqrt{2}$, giving 31 mrad as the expected phase uncertainty due to shot noise. Our 80-mrad unaveraged phase noise indicates that our measurement is not shot limited. This excess phase noise cannot be explained by the 2% A/D noise, nor by the electrical (detector) noise at the laser powers used. The equal phase noises measured for both the 500-kHz linewidth DFB and the 1 kHz linewidth fiber laser show that this excess phase noise is not due to any delay mismatch between the demodulators. We believe this excess noise is due to interferometer instabilities.

As a performance metric, we consider the phase transition's rise time (ideally zero). However, for the data of Fig. 3 (500 averages) we measure a 10% to 90% rise time of 2.1 ps. We attribute this to jitter in the pattern generator. Examining the unaveraged data for $\sim$10 data points around each transition shows that the transitions occur within less than one equivalent-time sample period (1 ps). This indicates no measurable jitter during the 100 ns required to acquire ten data points. To measure the jitter in the transition edge occurring during the full 1-ms interval of the data set in Fig. 3, we divided the full data set into ten equal time slices and averaged each individually. We observed the position of the transition edge moving back and forth with peak-to-peak variation of 5 ps (inset, Fig. 3). This is consistent with both the pattern generator's 9 ps (peak-to-peak) jitter specification and the amount of jitter required to produce the rounded 2.1-ps rise time when averaging a sharp (but jittery) transition.

The demonstrated phase referencing scheme allows direct LOS measurements of modulated phase with very high resolution. Previous works show LOS can operate at much higher temporal resolution than demonstrated here [1].

Acknowledgment

The authors would like to thank E. R. Williams for help with the data analysis.

References

[1] C. Dorrer, C. R. Doerr, I. Kang, R. Ryf, J. Leuthold, and P. J. Winzer, "Measurement of eye diagrams and constellation diagrams of optical sources using linear optics and waveguide technology," *J. Lightw. Technol.*, vol. 23, no. 2, pp. 178–186, Feb. 2005.

[2] F. P. Romstad, D. Birkedal, J. Mork, and J. M. Hvam, "Heterodyne technique for measuring the amplitude and phase transfer functions of an optical modulator," *IEEE Photon. Technol. Lett.*, vol. 14, no. 5, pp. 621–623, May 2002.

[3] C. Dorrer, "Interferometric techniques for the characterization of temporal modulators," *IEEE Photon. Technol. Lett.*, vol. 17, no. 12, pp. 2688–2690, Dec. 2005.

[4] Y. Park, T.-J. Ahn, and J. Azana, "Direct time-response measurement of high-speed optical modulators based on stretched-pulse interferometry," *Opt. Lett.*, vol. 32, no. 23, pp. 3411–3413, 2007.

[5] C. Dorrer and I. Kang, "Simultaneous temporal characterization of telecommunication optical pulses and modulators by use of spectrograms," *Opt. Lett.*, vol. 27, no. 15, pp. 1315–1317, 2002.

[6] W. C. Swann, L. Lorini, J. Bergquist, and N. R. Newbury, "Narrow linewidth 1.5 mm sources and the thermal limit," in *Proc. LEOS Summer Topical Meetings*, Portland, OR, 2007, p. WC2.3.

[7] K. Okamoto and F. Ito, "Ultrafast measurement of optical DPSK signals using 1-Symbol delayed dual-channel linear optical sampling," *IEEE Photon. Technol. Lett.*, vol. 20, no. 11, pp. 948–950, Jun. 1, 2008.

[8] N. R. Newbury and W. C. Swann, "Low-noise fiber laser frequency combs," *J. Opt. Soc. Amer. B*, vol. 24, pp. 1756–1770, 2007.

[9] I. Coddington, W. C. Swann, and N. R. Newbury, "Coherent multiheterodyne spectrscopy using stabilized optical frequency combs," *Phys. Rev. Lett.*, vol. 100, pp. 103902–013906, 2008.

[10] I. Kim, C. Kim, and G. Li, "Requirements for the sampling source in coherent linear sampling," *Opt. Express*, vol. 12, pp. 2723–2730, 2004.

Authorized licensed use limited to: IEEE Xplore. Downloaded on February 2, 2009 at 18:52 from IEEE Xplore. Restrictions apply.