Detection of Trace Water Vapor in High-Purity Phosphine Using Cavity Ring-down Spectroscopy

HANS H. FUNKE, MARK W. RAYNOR,* KRIS A. BERTNESS,† and YU CHEN

Matheson Tri-Gas, Inc., Advanced Technology Center, 1861 Lefthand Circle, Longmont, Colorado 80501 (H.H.F., M.W.R.); National Institute of Standards and Technology, Optoelectronics Division, Mailcode 815.04, 325 Broadway, Boulder, Colorado 80305-3328 (K.A.B.); and Tiger Optics, 250 Titus Avenue, Warrington, Pennsylvania 18976 (Y.C.)

The presence of trace water vapor in process gases such as phosphine, used for compound semiconductor epitaxial growth, can negatively affect the optical and electrical properties of the final device. Therefore, sensitive H_2O measurement techniques are required to monitor precursor purity and detect unacceptable contamination levels. A commercial cavity ring-down spectrometer that monitors an H_2O absorption line at a wavelength of 1392.53 nm was investigated for service in high purity PH_3. Spectral parameters such as the line shape of water vapor in the presence of PH_3 as well as background features due to PH_3 were measured at different pressures and incorporated into the data analysis software for accurate moisture readings. Test concentrations generated with a diffusion vial-based H_2O source and dilution manifold were used to verify instrument accuracy, sensitivity, linearity, and response time. H_2O readings at 13.2 kPa corresponded well to added concentrations (slope = 0.990 ± 0.01) and were linear in the tested range (0–52.7 nmol mol^{-1}). The analyzer was sensitive to changes in H_2O concentration of 1.3 nmol mol^{-1} based on 3σ of the calibration curve intercept for a weighted linear fit. Local PH_3 absorption features that could not be distinguished from the H_2O line were present in the purified PH_3 spectra and resulted in an additional systematic uncertainty of 9.0 nmol mol^{-1}. Equilibration to changing H_2O levels at a flow rate of 80 std cm^3 min^{-1} PH_3 occurred in 10–30 minutes. The results indicate that cavity ring-down spectroscopy (CRDS) at 1392.53 nm may be useful for applications such as on-line monitoring (and dry-down) of phosphine gas delivery lines or the quality control of cylinder sources.

Index Headings: **Phosphine; Cavity ring-down spectroscopy; On-line monitoring; Water vapor; Moisture; 1392.53 nm H_2O transition; Oxygen contamination; Dry-down.**

INTRODUCTION

Successful manufacture of phosphide-based high brightness light emitting diodes, laser devices, and solar cells relies on the availability of high purity precursors for metal organic chemical vapor deposition (MOCVD). In particular, the oxygen content of the precursors has been identified as critical to the performance of the final device.[1–7] Oxygen forms a deep recombination level in III-V semiconductors and can increase the threshold current and reduce photoluminescence efficiency, minority-carrier lifetimes, and device reliability even at levels below 10^{17} cm^{-3}.[1–4] The incorporation of oxygen in the growing film is more pronounced when the film contains highly reactive constituents such as aluminum. Therefore, it is important to identify and control critical oxygen-containing impurities in both Group III organometallic and Group V hydride gas precursors, especially when growing epitaxial films such as AlInP and AlGaInP.[7] A number of studies have shown that methoxide impurities in trimethylaluminum and trimethylindium precursors can significantly influence the quality of epitaxial layers.[2–5] In addition, it is also necessary to minimize water vapor contamination that may be introduced into the MOCVD tool from the phosphine process gas.[1,6]

Water vapor is one of the most difficult impurities to eliminate because of its ubiquity and chemical properties. The concentration of H_2O in the phosphine delivered from high-pressure cylinders may vary from cylinder to cylinder according to the source gas purity, effectiveness of cylinder preparation, and the usage conditions. Increasing concentrations of H_2O have been observed during gas-phase withdrawal from cylinders, because the less volatile impurities concentrate in the liquid phase and are emitted at progressively higher concentrations as the cylinder empties.[8] Trace water may also originate from the delivery system if it has not been completely dried down prior to flowing phosphine.[9] Consequently, as device manufacturers seek to improve products, sensitive H_2O measurement techniques are required to monitor the phosphine gas purity and detect unacceptable contamination levels.

Development of on-line monitors for trace water vapor analysis in process gases is an area of active research.[10–18] To date, Fourier transform infrared (FT-IR) spectroscopy has been the method of choice for the analysis of hydride gases with detection reported down to 2 nmol mol^{-1} (or 2 ppb) on a fully optimized research instrument.[15] However, as newly available commercial FT-IR gas analyzers are typically only capable of making water vapor measurements with a precision of a few tens of nmol mol^{-1},[12,13] other techniques with potentially high sensitivity have been investigated. Bandy has shown that negative ion-atmospheric pressure ionization mass spectrometry (APIMS) is capable of detecting H_2O in ammonia down to 1 nmol mol^{-1}, which indicates that this approach may also be feasible in phosphine.[16] Unfortunately, APIMS instrumentation is currently complex, expensive, and poorly suited to production analysis. Therefore, most recent studies have focused on laser-based spectroscopic methods such as tunable diode laser absorption spectroscopy[14,17–19,21] and cavity ring-down spectroscopy (CRDS).[10,20–26]

The CRDS technique is based on optical excitation of a stable cavity resonator (formed by two highly reflective mirrors) with a narrow bandwidth laser.[20,25] The schematic in Fig. 1 shows the basic components of such a system. Light is reflected back and forth by the mirrors many times, leaking a tiny amount upon each reflection to a detector located down-beam of the resonator. The intensity of the light in the ring-down cavity will build to a high intensity when there is constructive interference between these multiple passes. When

Received 3 August 2006; accepted 18 January 2007.
* Author to whom correspondence should be sent. E-mail: mraynor@matheson-trigas.com.
† Contributions of NIST authors are not subject to copyright. Certain commercial products are identified in this paper by manufacturer's name or label only to adequately describe experimental procedures; this identification does not imply endorsement by NIST, nor does it imply that the particular products or equipment are necessarily the best available for that purpose.

0003-7028/07/6104-0419$2.00/0
© 2007 Society for Applied Spectroscopy

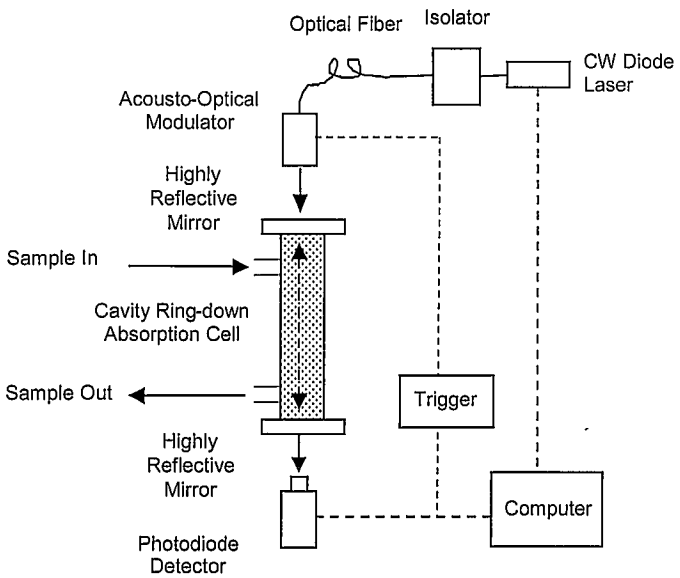

FIG. 1. Main components of a cavity ring-down spectrometer.

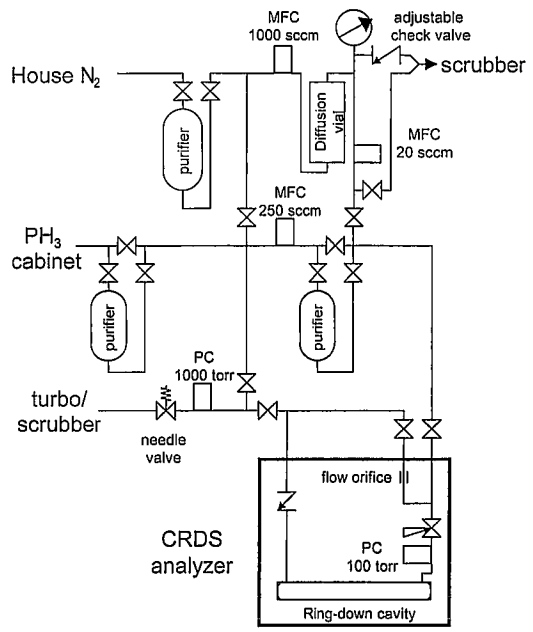

FIG. 2. Experimental setup including H_2O source.

the exiting light intensity reaches a predetermined threshold, the laser beam is abruptly interrupted and the exponentially decaying ring-down signal is recorded. The ring-down time constant, $\tau(\nu)$, characterizing the signal decay depends upon the total optical losses in the cavity and in general will be frequency (wavelength) dependent. The dominant losses include the transmittance of the cavity mirrors and absorption by the cavity medium. The base ring-down time τ_0 is measured at a frequency removed from the molecular absorption peak of the analyte. When the probe laser is tuned through an absorption transition of the analyte, τ will decrease relative to τ_0. In this experiment $\tau(\nu)$ is measured in the vicinity of a strong water absorption line. The water concentration in the sample gas is calculated from the following equation:

$$N = [1/\tau(\nu) - 1/\tau_0][c\sigma(\nu)]^{-1}$$

where c is the speed of light, N is the number density (or concentration of moisture), σ is the absorption cross-section of H_2O, and ν is the frequency of the probe laser. Because of the high-reflectivity mirrors forming the optical resonator, the effective path length of the light beam in the ring-down cavity is in the range of kilometers, and consequently high sensitivity can be obtained.

Cavity ring-down spectroscopy measurements in PH_3 have been previously reported using a laser source at 940 nm, but the absorbance transitions due to the PH_3 matrix limited the sensitivity for water in this spectral region to about 50 nmol mol^{-1}.[24,26] In the current work, a commercial CRDS instrument has been adapted and tested for trace moisture measurements in PH_3 at a wavelength of 1392.53 nm, with the objective of further increasing the sensitivity of the technique. For accurate analysis, both the background interference of the matrix gas as well as distortion of the H_2O absorption features due to absorption line broadening by PH_3 have to be determined. Different matrix gases broaden the H_2O line shape to different extents and the specific broadening corrections at the spectral line used for the analysis have to be measured. Spectral data for purified PH_3 and PH_3 mixed with humidified nitrogen have been measured to determine the optimum wavelength and pressure for H_2O impurity measurements, assess the interference of PH_3 absorption transitions, and characterize the broadening effect of the PH_3 matrix gas on the moisture line with respect to that produced by nitrogen. Performance data such as instrument accuracy, ultimate sensitivity, and response time are presented and discussed with regard to on-line CRDS monitoring of trace water vapor in PH_3.

EXPERIMENTAL

Instrument and Dilution Manifold Setup. The experiments were conducted with a MTO-LP-H2O CRDS instrument from Tiger Optics, Warrington, PA, and a dilution manifold to generate precise water vapor levels in phosphine. The manifold layout, including a diffusion vial-based source of water (Valco Instruments Co. Inc., Houston, TX) is shown in Fig. 2. A water vapor emission rate of 7×10^{-7} g min^{-1} was measured from the diffusion vial at a gauge pressure of 360 kPa and a temperature of 35 °C. For measurements at high concentration, the temperature of the diffusion vial was increased to 80 °C with an emission rate of 1×10^{-5} g min^{-1}. The flow across the diffusion vial was controlled with a mass flow controller and an adjustable check valve maintained back-pressure in the system. A 20 standard cm^3 min^{-1} (sccm) mass flow controller was used for the addition of the humidified nitrogen stream and a 250 sccm mass flow controller maintained the flow of bulk N_2 or PH_3. Measurements were made with the CRDS instrument at room temperature and with manifold lines temperature controlled to 50 °C.

The MTO-LP-H2O instrument was designed for use at flow rates of ~500 sccm. The incoming gas stream is divided into a bypass stream that is restricted by a flow orifice and the sample stream that passes through the ring-down cavity. When the inlet valve is closed, the inlet system can be purged through the bypass without contaminating the ring-down cavity. Under normal operation with an open inlet valve, ~250 sccm passes through the cavity and ~250 sccm is directed through the

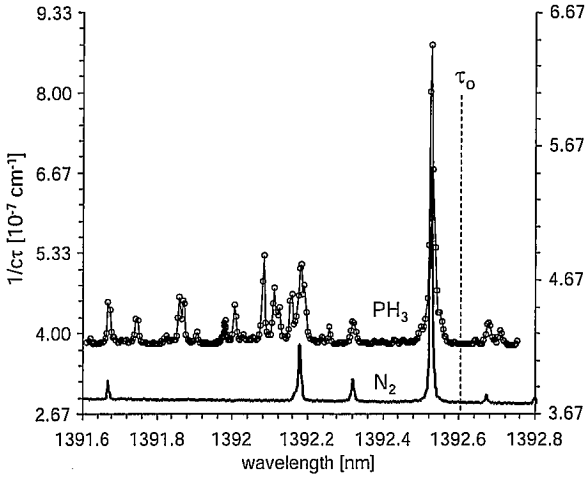

FIG. 3. Comparison of water vapor spectra in N_2 (~220 nmol mol^{-1}) and PH_3 (~400 nmol mol^{-1}). Note: upper spectra are offset on the vertical scale for clarity.

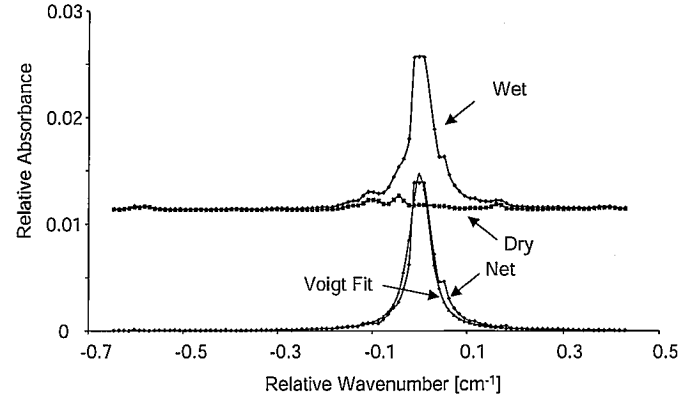

FIG. 4. Measured spectra and Voigt fit of the 1392.5 nm H_2O line. 829 nmol mol^{-1} of H_2O in PH_3 at a total pressure of 12.6 kPa. For the Voigt fit, Gaussian full-width = 0.0208 cm^{-1}, Lorentzian full-width = 0.04473 cm^{-1}. Note: upper spectra are offset on the vertical scale for clarity.

bypass. In our experiments, the bypass line was closed since the total flow rate was limited to 100 sccm by the external pump and scrubbing system. Further, the instrument's internal pressure controller was not functional at these low flow rates, since the pressure drop inside the instrument was insufficient to provide the required pressures in the ring-down cavity. Stable flow rates and measurements were obtained by adjusting the external pressure controller slightly above the internal settings, thus forcing the internal controller to open completely. Two purifiers for nitrogen and PH_3 were installed in close proximity to the instrument, and two separate purifiers were mounted upstream close to a molecular beam epitaxy tool for PH_3 and inside the gas cabinet for nitrogen. The phosphine used in this work had a purity of >99.9999% and was supplied from a cylinder housed in a gas cabinet. All measured impurities were certified by the manufacturer to be below the specified concentrations (<100 nmol mol^{-1}).

Instrument Operation. The MTO-LP-H2O has several modes of operation. The standard measuring mode collects a ring-down time off-peak as background, and then determines ring-down times at the water peak center to calculate the concentration in the gas stream. A fraction of the laser beam is directed through a built-in H_2O vapor cell that is used as internal frequency reference intended to maintain the probe laser frequency at the peak of the H_2O absorption line. In the normal operating mode of the instrument, 10 ring-down measurements are averaged for the displayed readings.

Additionally, complete spectra were collected in an engineering mode by scanning the diode laser emission frequency through incremental adjustment of the diode temperature. At a diode laser tuning rate of 0.104 nm/°C and smallest resolvable temperature steps of 0.02 °C, the spectral resolution is ~0.002 nm (equal to frequency steps of ~300 MHz or ~0.01 cm^{-1} in wave number units). The spectral scanning mode does not include any correction for drifts used for normal data collection. The measured spectra therefore typically include some artifacts but provide qualitative information about relative peak locations and line shape.

RESULTS AND DISCUSSION

Spectral Characterization. Spectral scans for both nitrogen and PH_3 were collected to determine the appropriate location for the water measurements. As shown in Fig. 3, which compares H_2O survey spectra in PH_3 and N_2, the line at 1392.53 nm is the best choice for probing H_2O in PH_3. This choice is based upon the available spectral range of the laser diode used by the instrument, the strength of the 1392.53 nm line, and the relatively small interference by local PH_3 absorption lines. The optimal location for background measurements of τ_0 without PH_3 and H_2O interferences was determined from the spectrum in Fig. 3. The diode laser emission wavelength of 1392.7 nm, which was originally used for background correction in N_2, showed PH_3 interference. Consequently, a laser wavelength of 1392.65 nm was selected instead for measurement of τ_0.

The line strength of the H_2O absorption at 1392.53 nm, is known from the HITRAN data base. Its value in nitrogen is 1.80×10^{-20} cm^{-1}cm^2/molecule.[27] Although the integrated absorption of the water line is assumed to be constant, the line shape is dependent on the pressure and composition of the matrix gas. Therefore any change in these parameters, such as switching the matrix gas from nitrogen to phosphine, will alter the response at the peak of the curve, where the instrument makes the H_2O measurement. To correct for these variations, we measured a full intensity versus frequency profile for PH_3 mixed with approximately 850 nmol mol^{-1} H_2O and for purified PH_3, both at 12.6 kPa. The net response from the H_2O was determined by subtracting the dry profile from the wet profile and fitting the net profile with a Voigt line shape, a convolution of Gaussian and Lorentzian shapes, as illustrated in Fig. 4. The Lorentzian line width for H_2O in PH_3 can be compared with the line width of H_2O in other matrix gases to calculate the ratio of the two peak heights for the same H_2O concentration but in different matrix gases. This ratio is the pressure broadening correction factor, and its numerical value was 1.68 for the H_2O line at 1392.5 nm for H_2O in PH_3 compared to H_2O in N_2.

The PH_3 spectral features at 1392.5 nm that interfere with the H_2O measurements are visible in the spectral scans of purified PH_3 in Fig. 5. Since spectral line shapes narrow at lower pressures, we investigated whether PH_3 lines could be separated from the target H_2O absorption line by decreasing the operating pressure. Several spectra were collected between 6.1 kPa and 13.2 kPa. Although interfering lines are better resolved at reduced pressure, even at 6.1 kPa, significant overlap is apparent. A trade-off between increased noise levels and better

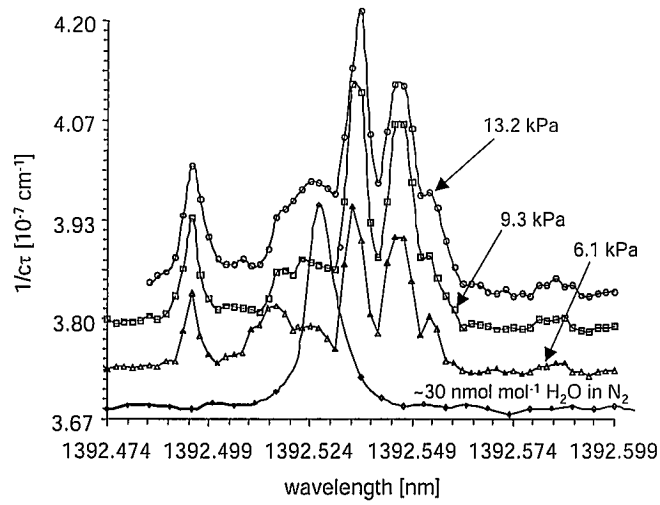

FIG. 5. Spectra of purified PH_3 at 6.1, 9.3, and 13.2 kPa and comparison with spectrum of H_2O in N_2 at 13.2 kPa. Note: upper three spectra are offset on the vertical scale for clarity.

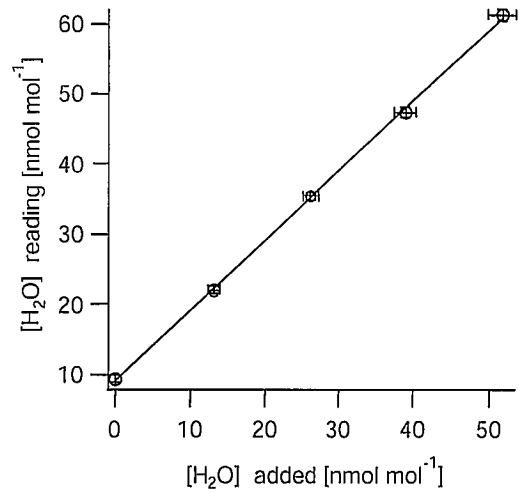

FIG. 7. Response curve for H_2O addition to dry PH_3 calculated from data in Fig. 6.

spectral resolution has to be taken into account. Since complete separation of the peaks was not possible at lower pressure, operation at 13.2 kPa to increase signal strength was selected. Spectral contribution from other impurities in the PH_3, although possible, was considered to be highly unlikely due to the high purity of the PH_3 used in the study. The absorption coefficient of the interfering PH_3 lines was equivalent to the absorption coefficient of the 1392.53 nm H_2O line produced by 9 nm mol^{-1} of water in PH_3. The confidence in low-level H_2O readings therefore will depend on the residual moisture in the driest background that can be achieved by purification and dilution of moisture outgassing contributions.

Response to Addition of H_2O in PH_3. The dry-down of the manifold, gas lines, and instrument were initially studied in purified nitrogen. Purging the CRDS instrument at 50 to 100 sccm resulted in decreasing H_2O levels to reach less than 10 nmol mol^{-1} within about 1–2 hrs. After several weeks of purge with intermittent measurements in the presence of added moisture or PH_3, a slow decrease in ultimately achievable

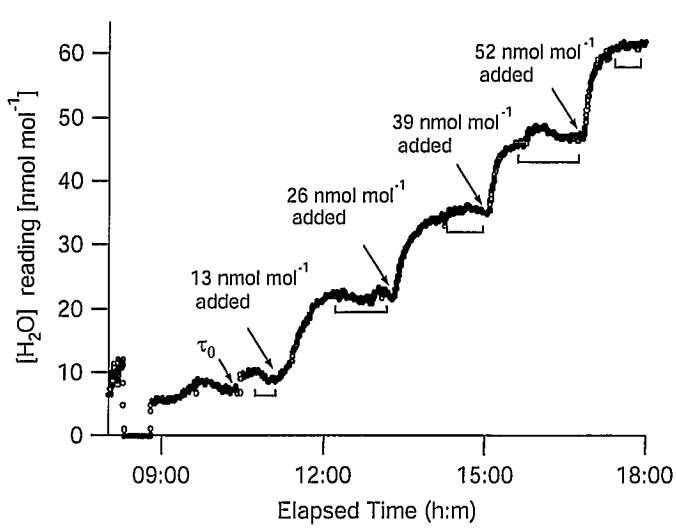

FIG. 6. Time profile showing H_2O reading during H_2O addition to purified PH_3 stream and the data points used to plot the response curve shown in Fig. 7.

background concentrations was observed. The lowest H_2O levels were in the range of 2–5 nmol mol^{-1}.

The response of the instrument to the addition of H_2O in PH_3 after incorporation of the spectral data for adjustment of the software is shown in Fig. 6. At a flow rate of 80 sccm PH_3, the instrument equilibrated within 10–30 minutes. Faster equilibration is expected with sample gas additionally flowing via the bypass and when using higher sampling flow rates (up to 250 sccm) that were precluded in this study due to scrubber limitations.

The response curve shown in Fig. 7 was extracted from the different steps shown in Fig. 6. It was generated from at least 90 data points measured over at least a 30 minute period. The graph was linear in the tested concentration range up to 52.7 nmol mol^{-1} and the H_2O readings corresponded well with the added concentrations. A weighted fit of average steady-state readings resulted in an intercept of 9.03 ± 0.42 and a slope of 0.990 ± 0.01. The small difference between the H_2O readings and added H_2O concentration is attributed to the uncertainty in the H_2O emitted from the diffusion vial and the flow rate of the mass flow controller, which each contributed 3.5% uncertainty. Horizontal error bars are shown on the calibration curve to capture the uncertainty in the added moisture concentrations. The instrument sensitivity (smallest detectable H_2O change) was 1.3 nmol mol^{-1} based on three times the standard deviation (3σ) of the intercept. A lower sensitivity of 1.7 nmol mol^{-1} was calculated based on 3σ of the readings during flow of purified PH_3 over a 30 minute period, prior to water addition.

The zero-offset of 9.03 nmol mol^{-1} is a result of the overlapping PH_3 and water features that cannot be distinguished. Lacking further verification, the current calibration uses a conservative approach and assumes that the residual feature in the dry PH_3 spectrum is due solely to water. Future repeat tests at higher flow with potentially lower residual H_2O levels are necessary to determine whether this assumption is valid and to assess the true instrument accuracy.

CONCLUSION

A commercially available cavity ring-down spectrometer that monitors the 1392.53 nm H_2O transition has been

investigated and adapted for the detection of trace water vapor in ultrapure PH_3. To enable accurate H_2O readings, spectral parameters such as the line shape of water vapor in the presence of PH_3, as well as background features due to PH_3, were measured at different pressures and incorporated into the data analysis software.

Test concentrations of water vapor in phosphine generated with a moisture source and a dilution manifold were used to verify the instrument performance. The CRDS analyzer responded within a few minutes to changing H_2O concentrations and readings were typically equilibrated within 30 minutes at 80 sccm. H_2O readings at 13.2 kPa corresponded well to added H_2O concentrations and were linear in the tested range. Further, the instrument had single digit nmol mol^{-1} sensitivity, which exceeds that of other on-line monitoring techniques currently available. The absolute detection limit and accuracy of the measurements was limited by PH_3 interference that could not be distinguished from residual water potentially present in the purified PH_3 gas stream. This additional systematic uncertainty of 9.0 nmol mol^{-1} could potentially be reduced by utilizing higher flow rates to minimize the residual H_2O level in the "dry" PH_3. However, test data are required to validate this assumption.

The results show that the tested CRDS instrument has the sensitivity, accuracy, and speed of response necessary for trace water vapor detection in phosphine. Further evaluation is underway to assess its capability and suitability for routine on-line monitoring of phosphine process lines and quality control of cylinders. Since this work has been limited to measurements at 1392.53 nm, detection of water vapor at lower concentrations may be possible if a strong moisture transition, absorbing at a wavelength region, free of, or with weaker PH_3 absorptions, can be found. The likelihood of this is unknown at this point. However, the availability of a high-resolution spectrum of phosphine (at high concentration) in the near-infrared region would certainly assist in the selection of such a line.

ACKNOWLEDGMENTS

We would like to thank Calvin Kreusen and Wen Bin Yan for helpful support with the CRDS analyzer, data processing, and software modifications, and Joseph Hodges for carefully reading the manuscript.

1. K. A. Bertness, S. R. Kurtz, S. E. Asher, and R. C. Reedy, J. Crystal Growth **196,** 13 (1999).
2. S. A. Rushworth, L. M. Smith, M. S. Ravetz, K. M. Coward, R. Odedra, R. Kanjolia, S. W. Bland, F. Dimroth, and A. W. Bett, J. Crystal Growth **248,** 86 (2003).
3. A. Knauer, H. Wenzel, G. Erbert, B. Sumpf, and M. Weyers, J. Electronic Materials **30,** 1421 (2001).
4. S. F. Yoon, K. H. Yip, H. Q. Zheng, and B. P. Gay, J. Crystal Growth **217,** 33 (2000).
5. L. M. Smith, S. A. Rushworth, M. S. Ravetz, R. Odedra, R. Kanjolia, C. Agert, F. Dimroth, U. Schubert, and A. W. Bett, J. Crystal Growth **221,** 86 (2000).
6. L. M. Fraas, J. A. Cape, P. S. McLeod, and L. D. Partain, J. Vac. Sci. Technol. B **3(3),** 921 (1985).
7. M. Weyers, A. Bhattacharaya, F. Bugge, and A. Knauer, in *High-Power Diode Lasers: Fundamentals, Technology, Applications,* R. Diehl, Ed. (Springer-Verlag, Berlin), Topics Appl. Phys. **78,** 83 (2000).
8. M. W. Raynor, D. Sims, H. Funke, T. Watanabe, D. Fraenkel, J. Vininski, R. Torres, and V. Houlding, *Detection and Control of Oxy-Impurities in Group V Hydride Gases and Gas Delivery Systems,* Proceedings of Compound Semiconductor Manufacturing Exposition, CS-Max 2001, Boston, MA (Institute of Physics Publishing, Bristol, UK, 2001), pp. 143–147.
9. T. Watanabe, H. H. Funke, R. Torres, M. W. Raynor, J. Vininski, and V. Houlding, J. Crystal Growth **248,** 67 (2003).
10. V. Vorsa, S. Dheandhanoo, S. N. Ketkar, and J. T. Hodges, Appl. Opt. **44,** 611 (2005).
11. H. H. Funke, B. L. Grissom, C. E. Mcgrew, and M. W. Raynor, Rev. Sci. Instrum. **74,** 49 (2003).
12. G. M. Mitchell, V. Vorsa, J. A. Milanowicz, D. J. Ragsdale, K. L. Marhefa, M. D. Wagner, S. N. Booth, and T. E. Conway, Gases Technol. **2(4),** 8 (2003).
13. P. Rosenthal and M. L. Spartz, Gases Technol. **2(5),** 8 (2003).
14. R. S. Inman and J. J. F. McAndrew, Anal. Chem. **66,** 2471 (1994).
15. S. Salim and A. Gupta, *Measurement of trace moisture in UHP hydride gases by Fourier transform infrared Spectrsocopy,* Proceedings of CleanRooms '96 West, Santa Clara, CA (Pennwell, Nashua, NH, 1996), pp. 22–32.
16. A. Bandy, *Determination of moisture in anhydrous ammonia at the ppbv level using isotope dilution atmospheric pressure ionization mass spectrometry,* Proceedings of SEMICON West 2004, SEMI Technology Symposium: Innovations in Semiconductor Manufacturing, San Francisco, CA (SEMI, San Jose, CA, 2004), pp. 131–144.
17. D. C. Hovde, J. T. Hodges, G. E. Scace, and J. A. Silver, Appl. Opt. **40,** 829 (2001).
18. A. Wright, M. Lyons, and C. Wood, *Description and performance of tunable diode laser based absorption analyzer for sub-ppb moisture detection,* Presented at SEMICON West, 2002 Standards Workshop (San Francisco, CA, 22–24 July 2002).
19. H. Funke, J. Yao, and M. W. Raynor, Solid State Technol. **47,** 49 (2004).
20. D. Romanini, A. A. Kachanov, N. Sadeghi, and F. Stoeckel, Chem. Phys. Lett. **270,** 538 (1997).
21. R. Hardiman, D. McKee, and K. Kimmerle, Gases Technol. **3,** 1 (2004).
22. W.-B. Yan, Gases Technol. **1(4),** 21 (2002).
23. J. T. Hodges, H. P. Layer, W. M. Miller, and G. E. Scace, Rev. Sci. Instrum. **75,** 849 (2004).
24. S. Y. Lehman, K. A. Bertness, and J. T. Hodges, J. Crystal Growth **250,** 262 (2003).
25. K. W. Busch and M. A. Busch, Eds., *Cavity Ringdown Spectoscopy: An Ultratrace-Absorption Measurement Technique,* ACS Symposium Series 720, Washington, D.C., (Oxford University Press, New York, 1999).
26. S. Y. Lehman, K. A. Bertness, and J. T. Hodges, J. Crystal Growth **261,** 225 (2004).
27. L. S. Rothman, A. Barbe, D. C. Benner, L. R. Brown, C. Camy-Peyret, M. R. Carleer, K. Chance, C. Clerbaux, V. Dana, V. M. Devi, A. Fayt, J.-M. Flaud, R. R. Gamache, A. Goldman, D. Jacquemart, K. W. Jucks, W. J. Laffert, J.-Y. Mandin, S. T. Massie, V. Nemtchinov, D. A. Newnham, A. Perrin, C. P. Rinsland, J. Schroeder, K. M. Smith, M. A. H. Smith, K. Tang, R. A. Toth, J. Vander Auwera, P. Varanasi, and K. Yoshino, J. Quant. Spectrosc. Radiat. Transfer **82,** 5 (2003).