Improved Fiber-Optic Magnetometer Based on Iron Garnet Crystals[1]

KB Rochford, RJ Espejo, AH Rose, and SD Dyer
National Institute of Standards and Technology
325 Broadway, Boulder, CO USA 80303-3328
t: (303) 497-5170 f: (303) 499-5621 e: rochford@boulder.nist.gov

Abstract

We demonstrate a single-lead fiber optic magnetic field sensor system based on ferrimagnetic iron garnet crystals. This system automatically compensates for magnetic domain fluctuations in the transducer. Noise floors of 1.1 nT/Hz^{½} at 1 kHz are demonstrated without ferrite flux concentrators. Use of a single distal ferrite flux concentrator improves the sensitivity and noise floor by 17 dB with a frequency response of ~180 MHz; this represents a 3x improvement in gain-bandwidth product over previous reports. Using a pair of flux concentrators yields a 29 dB improvement and a noise floor of 35 pT/Hz^{½} at 1 kHz.

1. Introduction

Ferrimagnetic iron garnet crystals exhibit magneto-optic sensitivity that is orders of magnitude higher than those of typical paramagnetic and diamagnetic materials. [1] In yttrium iron garnet (YIG), sensitivities of ~0.3°/mT with > 500 MHz bandwidth are obtained in commercially available flux-grown rods of 1 mm diameter and 5 mm length. Substituted garnets such as Ga:YIG exhibit larger sensitivities, though often with lower resonance frequencies that decrease bandwidth.

Noise floors as low as 1.4 pT/Hz^{½} have been demonstrated in Ga:YIG with 1 MHz bandwidth.[2] A demonstration of a YIG fiber optic sensor using flux concentrators yielded a 6 pT/Hz^{½} noise floor and bandwidth of ~10 MHz that was limited by the flux concentrator material.[3] In that work, the system required an impractical method of manual biasing at the sensor using an external magnet to obtain linear response and maximum sensitivity since the multi-domain nature of these ferrimagnetic materials can lead to a time-varying, zero-field circular birefringence.

In this paper we describe a YIG-based optical fiber sensor with improved stability and bandwidth that does not require biasing fields at the sensor. Lead sensitivity is greatly reduced and sensor component tolerances are eased by use of a broad-band source that ensures that undesired optical signals do not coherently interfere at the detectors. Signal stability has been improved by a servo-controlled electro-optic retarder within the detection system that tracks and eliminates magneto-optic biases in the garnet crystal. An improved flux concentrator design shows increased bandwidth to 180 MHz. Measurements of the sensor response as the temperature of the fiber lead and sensor head are varied show that major difficulties in stable magnetic field detection with iron garnets have been largely overcome.

2. Sensor system design

The sensor system, shown in Figure 1, is a modification of the polarization-rotated reflection (PRR) method described by Enokihara.[4] Linearly polarized light is launched into a polarization-maintaining (PM) fiber at 45º to the birefringence axes so that both fiber eigenpolarizations are equally illuminated. At the sensor (Figure 2), orthogonal linear polarizations exit the fiber shifted in phase by the fiber retardance, and the polarizations are converted into right- and left-circularly polarized light by the quarterwave plate (QWP). In magneto-optic materials, a magnetically-induced circular birefringence causes a phase shift that accumulates over the forward and backward passes through the mirrored YIG crystal. Back at the QWP, the circular polarizations are converted to orthogonal linear states with a 90º net rotation in azimuthal angle. Thus, light that propagated to the sensor in the fast PM eigenmode returns down the slow eigenmode, and vice versa. When the round-trip transit time of the light is faster than environmental perturbations, the two polarizations experience the same phase shift in the PM fiber, and differ only in the phase imparted by the magneto-optic transducer.

[1] This paper is the work of an agency of the US Governement and is not subject to copyright

A non-polarizing beamsplitter directs the light to a Wollaston polarizer aligned with axes bisecting the PM fiber axes. The detected interference signals are $V_{1,2} \propto 1/2\, P_0 (1 \pm \cos(4\theta))$, where P_0 is the power exiting the fiber and $\theta = S_B B$ is the magneto-optic phase shift, S_B is the transducer sensitivity, and B is the magnetic flux. A quarterwave retardance between the beamsplitter and polarizer is needed to provide the proper π/2 bias so that $V_{1,2} \propto 1/2\, P_0 (1 \pm \sin(4\theta))$ in our system, we instead use an electro-optic retardance modulator that provides a π/2 static bias plus a variable retardance that actively compensates for garnet drifts described below. Using difference-oversum (Δ/Σ) detection, we obtain a voltage

$$V = \left[\frac{V_1 - V_2}{V_1 + V_2} \right] = \sin(4S_B B) \approx 4S_B B$$

that is proportional to the magnetic flux B for small fields.

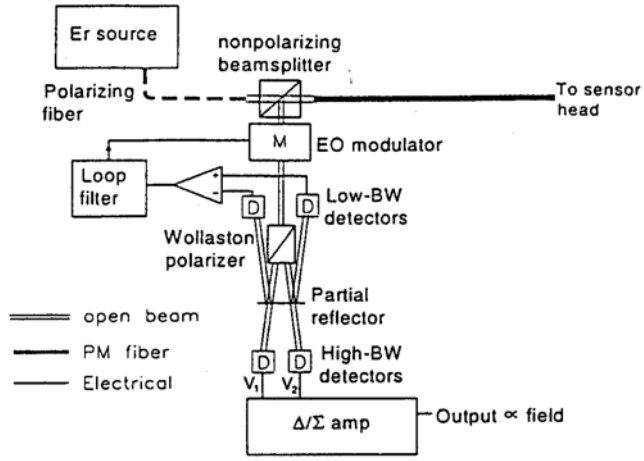

Figure 1. PRR system schematic. We use low-bandwidth detectors for evaluation purposes; alternatively, these can be eliminated and servo signals obtained from the high-bandwidth detectors.

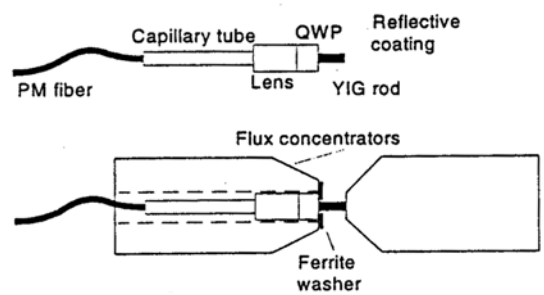

Figure 2. Magnetometer heads with and without ferrite flux concentrators (not to scale). The quarterwave plate (QWP) is oriented with axes at 45º with respect to the PM fiber axes so that right- and left-circular polarizations propagate in the YIG crystal. The assembly with concentrators is 9 mm diameter x 95 mm long.

In practice, the system retardance in the PM fiber cancels only when the sensor quarterwave plate retardance and alignment are exact. Any deviations allow some light to travel up and back in the same PM fiber axis, and these fields interfere with a phase that includes the time--varying PM fiber retardance. Analysis of the system using Jones calculus shows that if the quarterwave plate at the sensor head has ~0.1º retardance error or ~0.1º alignment error, then a 2π lead fiber retardance change will yield a measurement change of ~1 μrad (at the frequency of the retardance variation). The finite extinction (or h-parameter) in PM fiber makes waveplate alignment with < 0.3º error difficult without elaborate methods. Obtaining waveplates with 90 ±0.1º retardances pushes the limits of most vendor's measurement capability.[5] For real components, therefore, lead sensitivity may likely limit small-signal performance.

This noise source can be reduced by use of a broadband source with a coherence length shorter than the PM fiber retardance.[6] The two desirable polarization paths in the PRR lead fiber have nearly the same path length, while undesirable noise-producing paths have significant mismatch that includes the PM fiber retardance. If the source coherence length is shorter than the mismatch between undesired paths (but longer than the field-induced circular retardance), the undesirable signals will not coherently interfere and only contribute a fixed DC intensity. We use the amplified spontaneous emission from a pumped erbium fiber as the sensor's light source to obtain broadband light between 1525 and 1560 nm.

For applied fields well below saturation, the magneto-optic response in YIG can be idealized as $S_B = \theta_{sat}/(\mu_0 N_{eff} M_{sat})$, where θ_{sat}, is the saturation Faraday rotation at saturation magnetization M_{sat}, N_{eff} is the effective demagnetization factor, and μ_0 is the free-space permeability.[7] Materials can be

characterized with a normalized sensitivity S´ so that $SB \approx S'L/(\mu_0 N_{eff})$ for transducer length L. This response is stable when all domains in the crystal are averaged. In practice, however, the optical beam underfills the YIG rod and a zero-applied-field polarization rotation that depends on domain distribution may occur.[8] Thus, the field-induced phase shift $4\theta = 4S_B B$ must be modified as $4\theta = 4S_B B + 4\theta_B$, where θ_B is a low-frequency or DC bias that can be changed by saturating fields, temperature, stress, etc. In our system, a servo system cancels the phase drift $4\theta_B$, by adding a system retardance $\delta = -4\theta_B$ with the electro-optic retarder so that $V_1 = V_2$ within a DC to ~100 Hz servo bandwidth. For characterization purposes, we measure V_1 and V_2 independently from the sensor signal with low-bandwidth detectors that receive ~5% of the light from a partial reflector.

3. Experimental results

A sensor head was assembled using a 1 mm diameter x 2.5 mm long flux-grown (100) YIG crystal. The normalized sensitivity of YIG at 1.3 µm is S´ = 2.4 mrad/A,[7] and the demagnetizing factor $N_{eff} = 0.1124$ for this geometry (assuming an ideally soft ferrimagnetic).[9] For small signals, the predicted sensitivity of this crystal is $S_B \approx 43$ rad/T. With the sensor in a Helmholtz coil producing a 360 nT (rms) field (calculated from the coil current) at 1 kHz, we measured a sensitivity of 47 rad/T and a minimum detectible field of $B_{min} = 1.1$ nT/Hz^{½} (with ~10% uncertainty). This corresponds to a noise floor of 0.2 µrad/Hz'"z for our PRR system. Since we have 45 pW of DC power at each detector, the shot-noise limit is 0.08 prad/Hz^{½} or about 2½ times lower; we attribute the additional noise in our system to excess amplifier noise and imperfect reduction of source noise by the Δ/Σ circuit.

The improvement in lead insensitivity was demonstrated by placing a 3 m fiber lead into a heating chamber (Figure 3). Whereas a system with highly coherent light would require large excursions in the feedback signal to track the temperature changes, our system is impervious to changes in lead temperature. Measurement of the sensor response with the sensor head and lead fiber in the chamber showed temperature changes equivalent to the temperature sensitivity of the garnet.

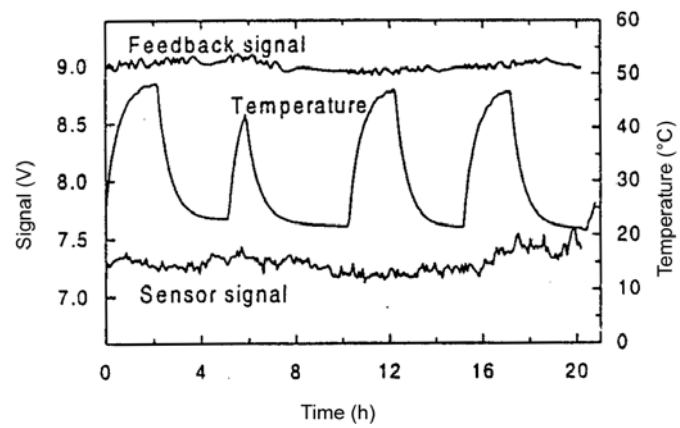

Figure 3. Sensor and feedback response to repeated heating of PM fiber lead.

Placing a single 9 mm diameter x 51 mm long cylindrical flux concentrator of nickel-zinc ferrite [10] at the distal end of the sensor provides ~17 dB additional sensitivity (Figure 4). We measure the frequency response with and without flux concentrators by placing the sensor in a RF-driven transverse electro-magnetic field cell and measuring the response as the drive frequency is swept. For this measurement, we replace the Δ/Σ circuit with a 100 MHz bandwidth difference amplifier and detect with 125 MHz bandwidth photoreceivers. Subtracting the responses with and without concentrators allows us to eliminate roll-off effects from the electronics and shows that the flux concentrator response exceeds 180 MHz. We measured a 160 pT/Hz^{½} noise floor (at 1 KHz) using this single flux concentrator configuration in the PRR system. This represents a 18x increase in bandwidth and a 3x improvement in the gain-bandwidth product compared to previous work that used two tapered flux concentrators to achieve a gain of 40x with a 10 MHz bandwidth.[3]

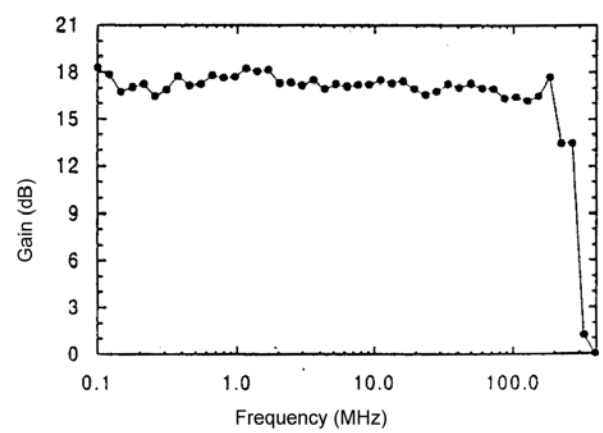

Figure 4. Sensor gain from single tapered flux concentrator (normalized to sensor response with no flux concentrator).

To add a second flux concentrator on the proximal side, we drilled a 3.1 mm diameter hole into 9 mm diameter x 6 mm thick ferrite disks and concatenated seven pieces with adhesive to form a 42 mm long rod. The rod tapered to 5 mm diameter over the last 5 mm. The sensor optics are threaded through the ferrite rod and a 0.4 mm thick ferrite washer with a ~2 mm diameter hole that was attached to the tapered rod (see Figure 2). The washer provides weak coupling between the YIG rod and ferrites. (The proximal concentrator could be improved by matching the washer hole and YIG diameter more closely, and by using a longer YIG rod so that a smaller fraction of the garnet is enclosed by the washer. Previous work [3] used a 5 mm long garnet that provides ~4x the sensitivity of the 2.5 mm long piece used here.) The dual-concentrator assembly provides a gain of ~29 dB compared to an isolated YIG sensor. The bandwidth, normalized by the bare YIG response, decreases to >60 MHz (Figure 5). Placing the sensor in a Helmholtz coil with a 90 nT (rms) field, we measure the signal and noise in a 1 Hz bandwidth using a spectrum analyzer. From the measured signal-to-noise ratio of 68.8 dB we obtain a minimum-detectable field of 33 pT/ $Hz^{1/2}$.

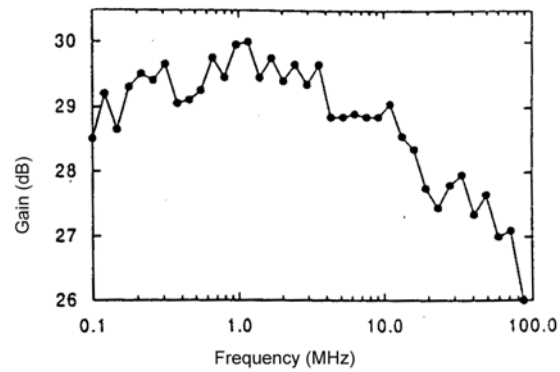

Figure 5. Sensor gain using two flux concentrators (normalized to sensor response without flux concentrators).

5. Conclusion

We have demonstrated a garnet-based fiber optic magnetometer with improved lead sensitivity and stability using a low-coherence source and feedback circuitry to counter domain-induced changes in the garnet. Using a 2.5 mm long x 1 mm diameter YIG rod, we measured a 1.1 nT/ $Hz^{1/2}$ noise floor without flux concentrators. Using one distal flux concentrator provides a 17 dB gain (160 pT/ $Hz^{1/2}$ noise floor) with a 180 MHz bandwidth, and the resulting gain-bandwidth product is over 3 times greater than previously reported work.[3] With two flux concentrators we measured a minimum-detectible field of 33 pT/ $Hz^{1/2}$ with > 60 MHz bandwidth. Additional improvements may be gained by using a 5 mm long YIG rod and designing for better ferrite-to-YIG coupling at the ferrite washer.

References

1. M.N. Deeter, G.W. Day, and A.H. Rose, "Magnetooptic Materials", in Handbook of Laser Science and Technology, Supplement 2: Optical Materials, Ed. Marvin J. Weber, (CRC Press, Inc., Boca Raton, FL, 1995), pp. 367-402.
2. M.N. Deeter, "Magneto-optic magnetic field sensor with 1.4 pT/Hz1R minimum detectable field at 1 kHz", Elec. Lett. 29 (1993) 993.
3. M.N. Deeter, "Fiber-optic Faraday-effect magnetic-field sensor based on flux concentrators", Appl. Opt. 35 (1996) 154.
4. A. Enokihara, M. Izutsu, and T. Sueta, "Optical fiber sensors using the method of polarization-rotated reflection", J. Lightwave Technol. 5 (1987) 1584.
5. K. B. Rochford, A. H. Rose, and C.M. Wang, "NIST study investigates retardance uncertainty", Laser Focus World (May 1997) 223.
6. G. Frosio and R. Dandliker, "Reciprocal reflection interferometer for a fiber-optic Faraday current sensor", Appl. Opt. 33 (1994) 6111.
7. M.N. Deeter, "Fast, sensitive, magnetic-field sensors based on the Faraday effect in YIG", J. Lightwave Technol. 8 (1990) 1838.
8. K.B. Rochford, A.H. Rose, and G.W. Day, "Magneto-optic sensors based on iron garnets", IEEE Trans. Magn. 32 (1996) 4113.
9. D. Chen, J.A. Brug, and R.B. Goldfarb, "Demagnetizing factors in cylinders," IEEE Trans. Magn. 27 (1991) 3601.
10. The flux concentrators were fabricated using composition #61 from Fair-Rite Products Corporation. This information is provided for completeness only and does not imply an endorsement by NIST. Similar products from other manufacturers may work as well or better.