NIST NFSYS 648S

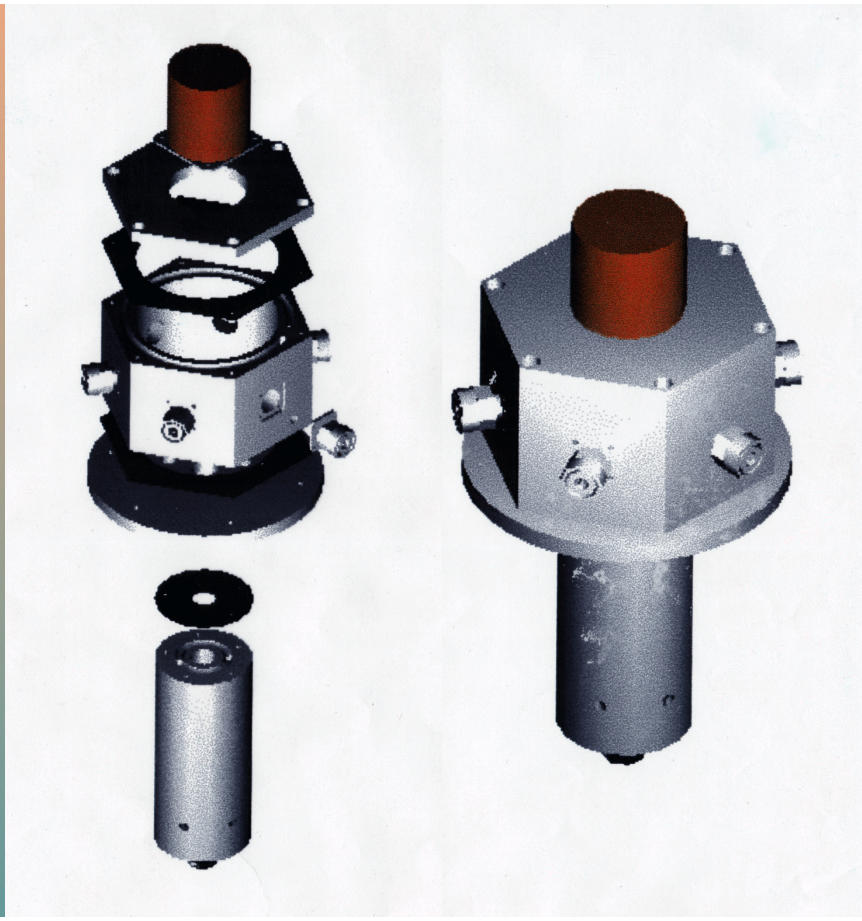

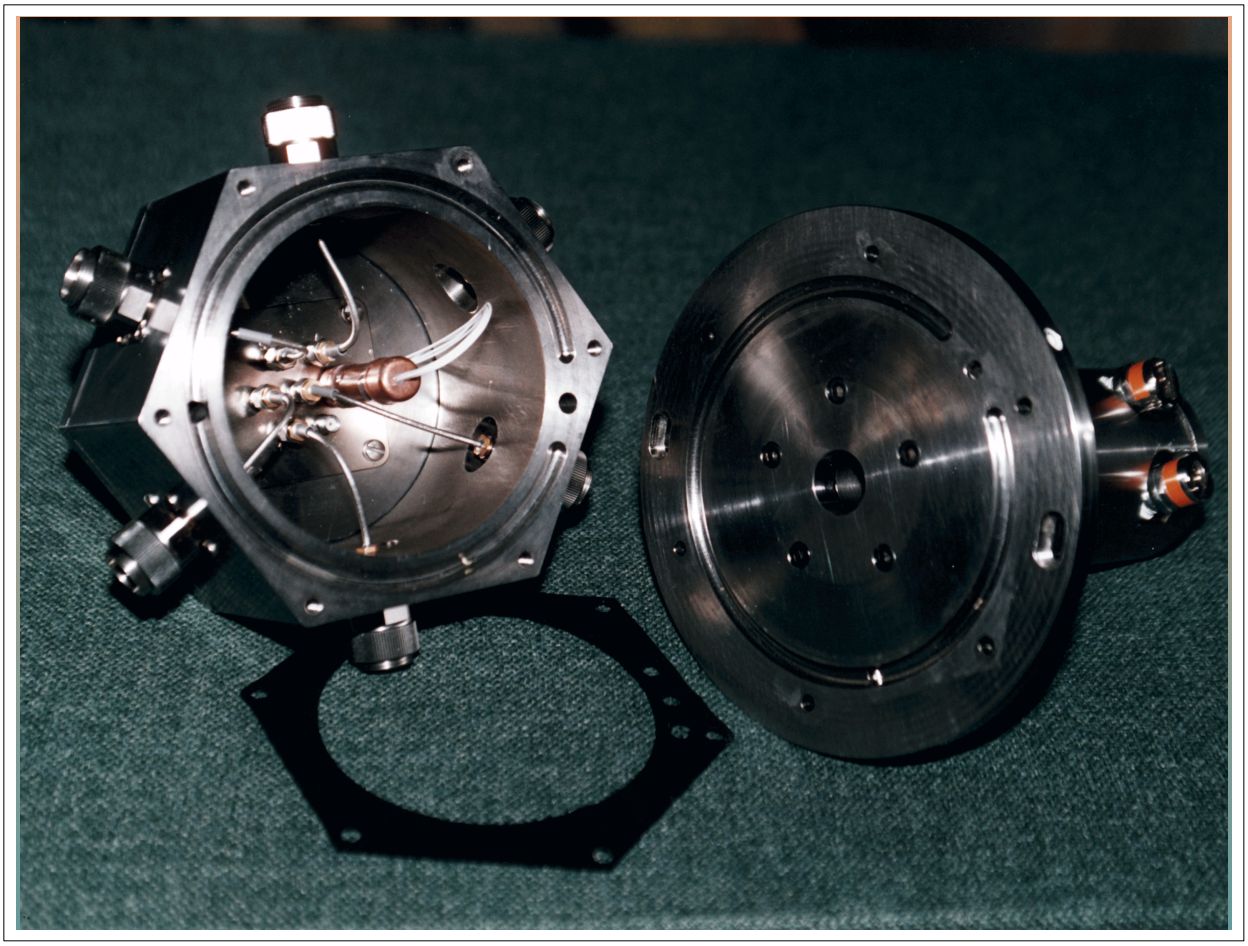

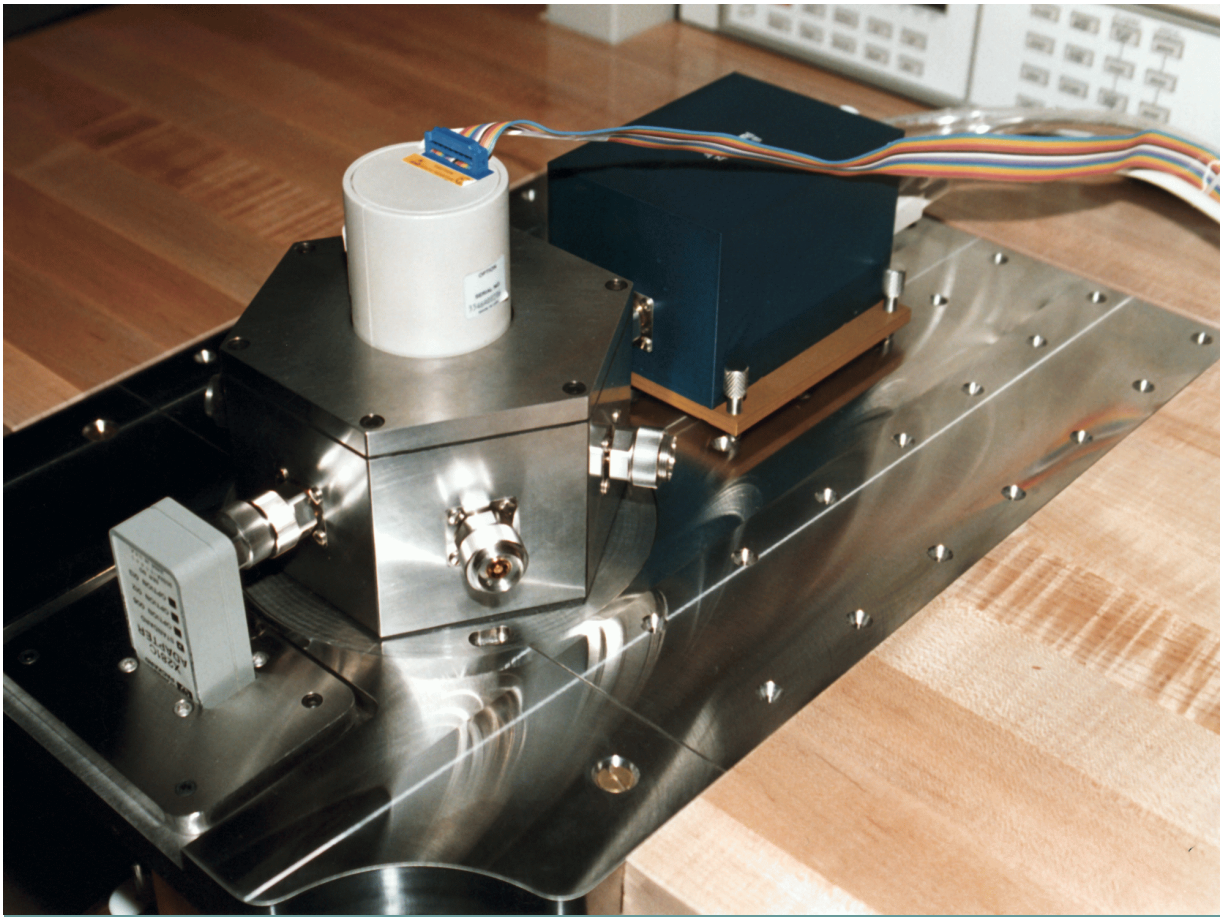

8 - 12 GHz
Radiometer

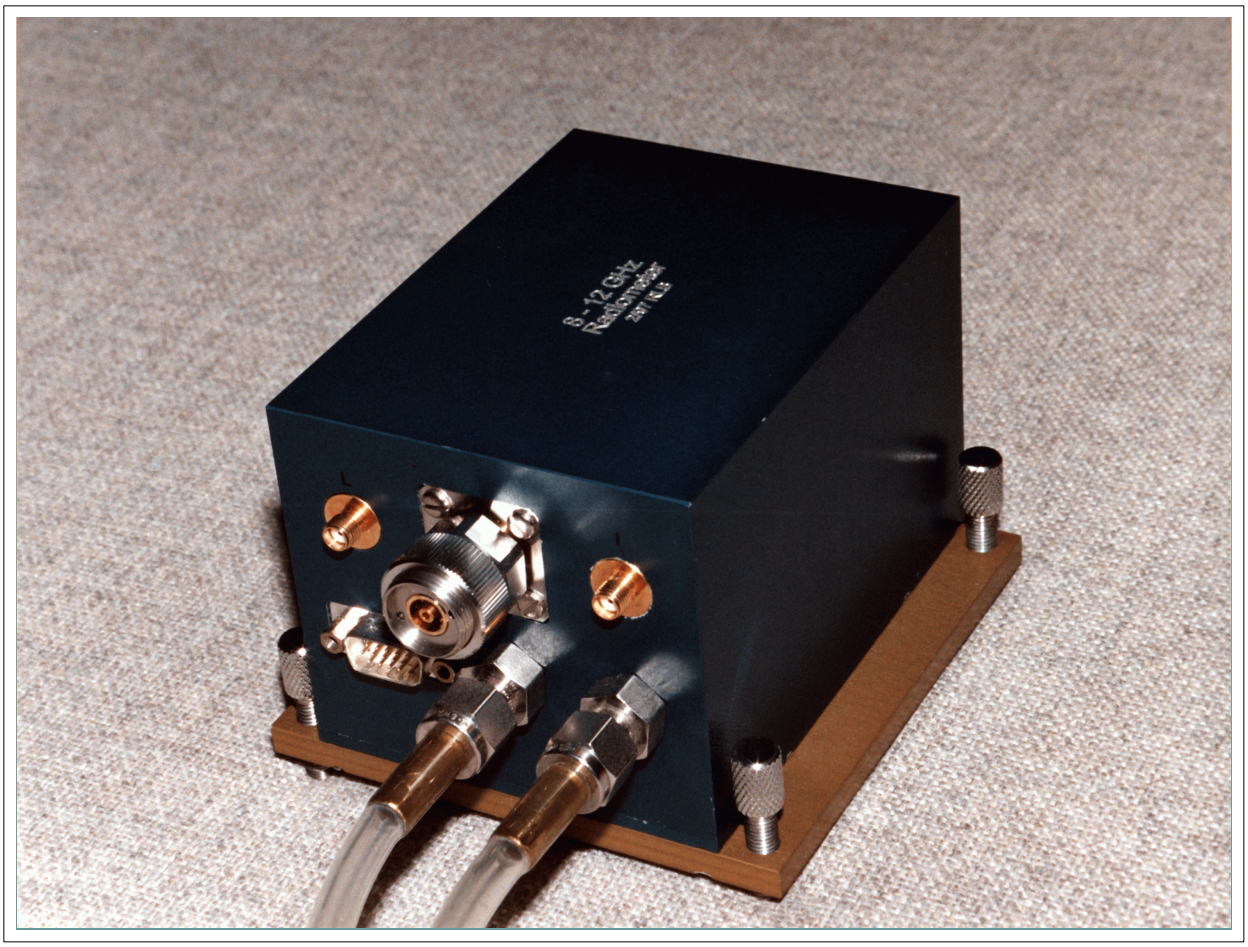
8 - 12 GHz
Radiometer

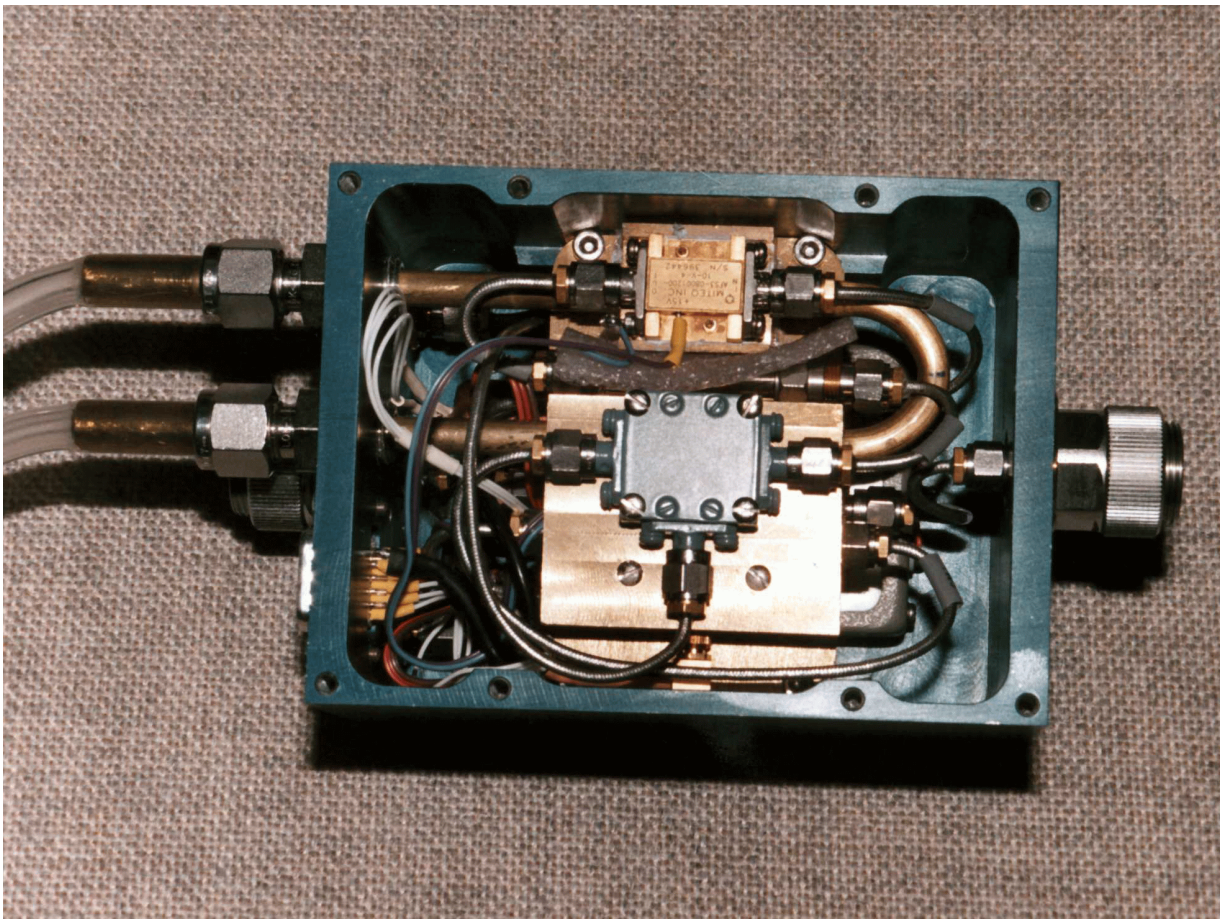

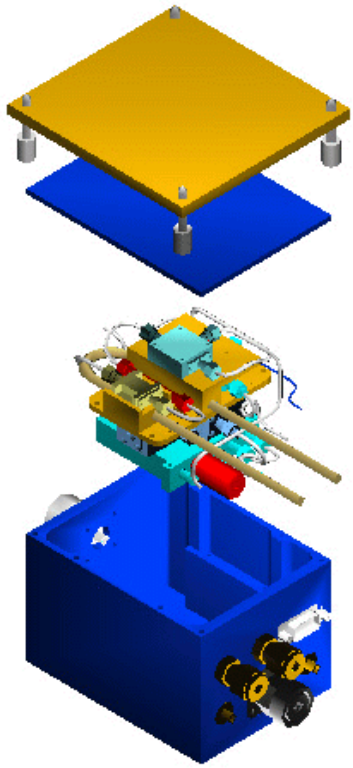

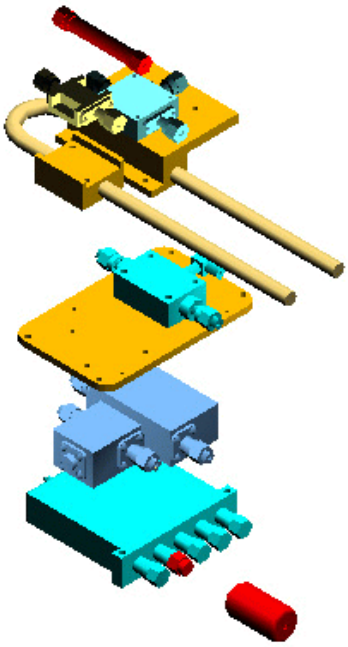

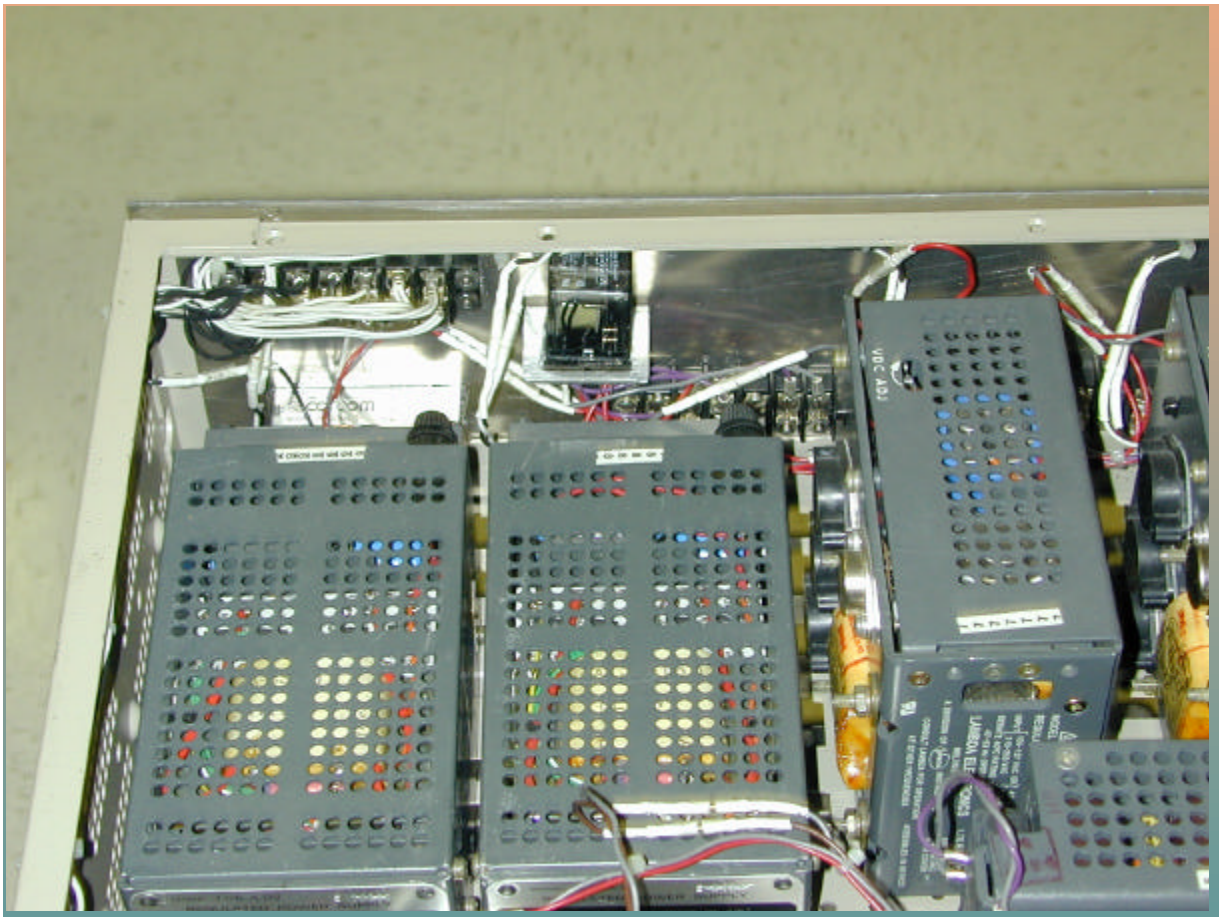
VDC ADJ

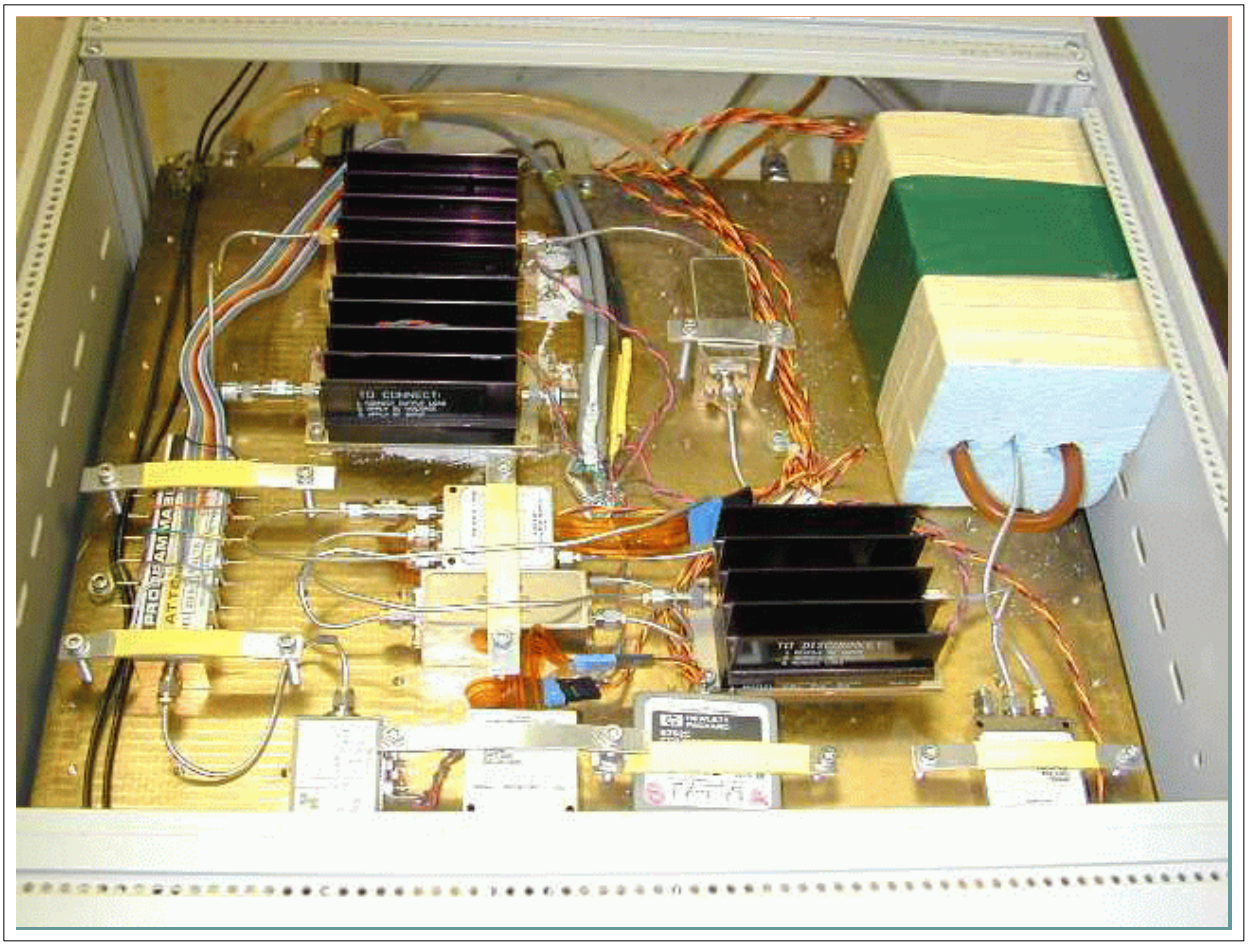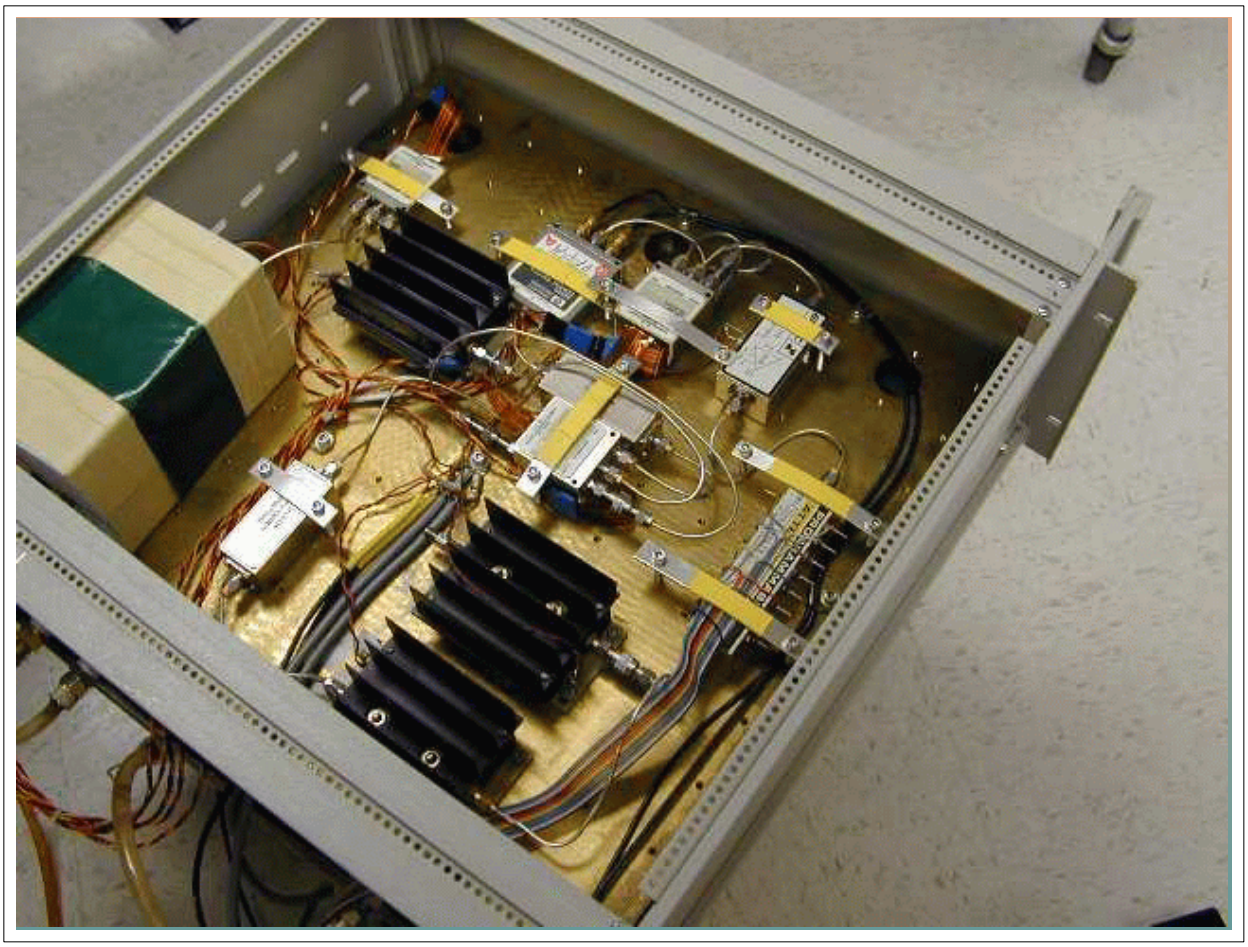
TO CONNECT
PROGRAM
ATTEN